THERMAL PRINTER

TSP552

TSP552II

TSP2000

PROGRAMMER'S MANUAL

star

Trademark acknowledgments

TSP552, TSP552II, TSP2000: Star Micronics Co., Ltd.
ESC/POS: Seiko Epson Corporation

Notice

- All rights reserved. Reproduction of any part of this manual in any form whatsoever, without STAR's express permission is forbidden.
- The contents of this manual are subject to change without notice.
- All efforts have been made to ensure the accuracy of the contents of this manual at the time of going to press. However, should any errors be detected, STAR would greatly appreciate being informed of them.
- The above notwithstanding, STAR can assume no responsibility for any errors in this manual.

© Copyright 1998-2000 Star Micronics Co., LTD.

TABLE OF CONTENTS

1. Dip Switch Setting (TSP552 / 552II) 1
1-1. Serial Interface Type 1
1-2. Parallel Interface Type 2
2. Dip Switch Setting (TSP2000) 3
2-1. Serial Interface Type 3
2-2. Parallel Interface Type 4
3. Control Codes 5
3-1. Star Mode Command Summary 5
3-2. Star Mode Command Specifications 9
3-3. ESC/POS Mode Command Summary 60
4. Character Code Tables 62

Please access the following URL
http://www.star-micronics.co.jp/service/sp_sup_e.htm
for the lastest revision of the manual.

1. Dip Switch Setting (TSP552 / 552II)

1-1. Serial Interface Type

DIP-SW 1

Switch	Function	ON	OFF
1	Data receive error	Error is ignored.	“?” is printed.
2	Receive buffer size	45 bytes	4 k bytes
3	Handshaking	XON/XOFF	DTR/DSR
4	Data bit	7 bits	8 bits
5	Parity check	Yes	No
6	Parity	Even	Odd
7	Baud rate	See Table 1.	
8			

DIP-SW 2

Switch	Function	ON	OFF
1	Handshaking conditions (conditions for BUSY)	Receive buffer full	Offline or receive buffer full
2	<FF> Code (Star mode)	Form Feed	Cut Command
	Graphic Adjustment (ESC/POS mode)	203 DPI	180 DPI
3	Print density	See Table 2.	
4			
5	Command	STAR	ESC/POS
6	Should not be changed (should be set to on).		
7	#6 pin reset signal	Valid	Invalid
8	#25 pin reset signal	Valid	Invalid

Table 1 Baud Rate

Data Rate	SW 1-7	SW 1-8
2400	ON	ON
4800	OFF	ON
9600	ON	OFF
19200	OFF	OFF

Table 2 Print Density

Print Density	SW 2-3	SW 2-4	Contents of Test Print Page
Light	ON	ON	Level 1
↑ (Standard)	OFF	ON	Level 2
↓	ON	OFF	Level 3
Dark	OFF	OFF	Level 4

1-2. Parallel Interface Type

DIP-SW 1

Switch	Function	ON	OFF
1	Auto CR	Valid	Invalid
2	Receive buffer size	45 bytes	4 k bytes
3	Do not change. (Should be set to OFF)		
4			
5			
6			
7			
8	Cut position adjust*1 (ESC/POS mode only)	Invalid	Valid

*1: Approximately 9mm of paper is fed before cutting.

DIP-SW 2

Switch	Function	ON	OFF
1	Handshaking conditions (conditions for BUSY)	Receive buffer full	Offline or receive buffer full
2	<FF> Code (Star mode only)	Form Feed	Cut Command
	Graphic Adjustment (ESC/POS mode)	203 DPI	Adjust for 180 DPI
3	Print density	See Table 3.	
4			
5	Command	STAR	ESC/POS
6	Do not change. (Should be set to ON)		
7	ACK plus width	1 µs	8 µs
8	#31 pin (INIT) reset signal	Valid	Invalid

Table 3 Print Density

Print Density	SW 2-3	SW 2-4	Contents of Test Print Page
Light	ON	ON	Level 1
↑ (Standard)	OFF	ON	Level 2
↓	ON	OFF	Level 3
Dark	OFF	OFF	Level 4

2. Dip Switch Setting (TSP2000)

2-1. Serial Interface Type

DIP-SW 1

Switch	Function	ON	OFF
1	Data receive error	Error is ignored.	“?” is printed.
2	Receive buffer size	68 bytes	4 k bytes
3	Handshaking	XON/XOFF	DTR/DSR
4	Data bit	7 bits	8 bits
5	Parity check	Yes	No
6	Parity	Even	Odd
7	Baud rate	19200 bps	9600 bps
8	Automatic Status Back function	Valid	Invalid

DIP-SW 2

Switch	Function	ON	OFF
1	Handshaking conditions (conditions for BUSY)	Receive buffer full	Offline or receive buffer full
2	<FF> Code (Star mode)	Cut Command	Form Feed
	Graphic Adjustment (ESC/POS mode)	180 DPI	203 DPI
3	Print density	See Table 2.	
4			
5	Should not be changed (should be set to off).		
6	Command	ESC/POS	STAR
7	Pin #25 (INIT) reset signal	Valid	Invalid
8	Pin #6 (DSR) reset signal	INIT	DSR

Table 2 Print Density

Print Density	SW 2-3	SW 2-4
Power economy mode	ON	ON
Standard	OFF	OFF
↑	ON	OFF
Dark	OFF	ON

2-2. Parallel Interface Type

DIP-SW 1

Switch	Function	ON	OFF
1	Auto CR	Valid	Invalid
2	Receive buffer size	68 bytes	4 k bytes
3	Should not be changed (should be set to off).		
4	Device ID reply	Valid	Invalid
5	Automatic Status Back function	Valid	Invalid
6	Negotiation Status Back function	Valid	Invalid
7	Treatment of missing data during reverse	Store	Delete
8	Cut position adjust *1	Valid	Invalid

DIP-SW 2

Switch	Function	ON	OFF
1	Handshaking conditions (conditions for BUSY)	Receive buffer full	Offline or receive buffer full
2	<FF> Code (Star mode)	Cut Command	Form Feed
	Graphic Adjustment (ESC/POS mode)	180 DPI	203 DPI
3	Print density	See Table 2.	
4			
5	Should not be changed (should be set to off).		
6	Command	ESC/POS	STAR
7	Always ON	Should be set to on.	
8			

*1 ESC/POS mode only

Table 2 Print Density

Print Density	SW 2-3	SW 2-4
Power economy mode	ON	ON
Standard	OFF	OFF
↑	ON	OFF
Dark	OFF	ON

3. Control Codes

3-1. Star Mode Command Summary

The details of each command are shown in the following sections.

Commands to Select Characters

Control codes	Hexadecimal codes	Function	Page
<ESC> "R" *n*	1B 52 *n*	Select international character set	9
<ESC> <GS> t *n*	1B 1D 74 *n*	Select character table	10
<ESC> "/" "1" <ESC> "/" <1>	1B 2F 31 1B 2F 01	Select slash zero	10
<ESC> "/" "0" <ESC> "/" <0>	1B 2F 30 1B 2F 00	Select normal zero	11
<ESC> "b" *n1 n2 n3 n4 d1 ... dk* <RS>	1B 62 *n1 n2 n3 n4 d1 ... dk 1E*	Select bar code printing	11
<ESC> "M"	1B 4D	Select 12-dot pitch printing	16
<ESC> "p"	1B 70	Select 14-dot pitch printing	16
<ESC> "P"	1B 50	Select 15-dot pitch printing	16
<ESC> ":"	1B 3A	Select 16-dot pitch printing	16
<ESC> <SP> *n*	1B 20 *n*	Set character spacing	17
<SO>	0E	Sets the printing magnified double in character width.	17
<DC4>	14	Resets the printing magnified in character width.	17
<ESC> "W" *n*	1B 57 *n*	Sets the magnification rate in character width.	18
<ESC> <SO>	1B 0E	Sets the printing magnified double in character height.	18
<ESC> <DC4>	1B 14	Resets the printing magnified in character height.	18
<ESC> "h" *n*	1B 68 *n*	Sets the magnification rate in character height.	19
<ESC> "–" "1" <ESC> "–" <1>	1B 2D 31 1B 2D 01	Select underlining	19

Control codes	Hexadecimal codes	Function	Page
<ESC> "_" "1" <ESC> "_" <1>	1B 5F 31 1B 5F 01	Select overlining	20
<ESC> "4"	1B 34	Select highlight printing	21
<ESC> "5"	1B 35	Cancel highlight printing	21
<SI>	0F	Inverted printing	21
<DC2>	12	Cancel inverted printing	22
<ESC> "E"	1B 45	Select emphasized printing	22
<ESC> "F"	1B 46	Cancel emphasized printing	22

Commands to Set the Page Format

Control codes	Hexadecimal codes	Function	Page
<ESC> "C" *n*	1B 43 *n*	Set page length in lines	23
<ESC> "C" <0> *n*	1B 43 00 *n*	Set page length in inches	23
<ESC> "N" *n*	1B 4E *n*	Set bottom margin	24
<ESC> "O"	1B 4F	Cancel bottom margin	24
<ESC> "l" *n*	1B 6C *n*	Set left margin	25
<ESC> "Q" *n*	1B 51 *n*	Set right margin	26

Commands to Move the Print Position

Control codes	Hexadecimal codes	Function	Page
<LF>	0A	Line Feed	27
<ESC> "a" *n*	1B 61 *n*	Feed paper n lines	27
<FF>	0C	Form Feed	27
<HT>	09	Horizontal tab	28
<VT>	0B	Vertical tab	28
<ESC> "z" "1"	1B 7A 31	Set line spacing to 4 mm	29
<ESC> "0"	1B 30	Set line spacing to 3 mm	29

Control codes	Hexadecimal codes	Function	Page
<ESC> "J" *n*	1B 4A *n*	One time n/4 mm feed	29
<ESC> "I" *n*	1B 49 *n*	One time n/8 mm feed	29
<ESC> "B" *n1 n2* ... <0>	1B 42 *n1 n2* ... 00	Set vertical tab stops	30
<ESC> "D" *n1 n2* ... <0>	1B 44 *n1 n2* ... 00	Set horizontal tab stops	30
<ESC> <GS> "A" *n1 n2*	1B 1D 41 *n1 n2*	Absolute position setting	31
<ESC> <GS> "R" *n1 n2*	1B 1D 52 *n1 n2*	Relative position setting	31
<ESC> <GS> "a" *n*	1B 1D 61 *n*	Alignment	32

Commands to Print Dot Graphics

Control codes	Hexadecimal codes	Function	Page
<ESC> "K" *n* <0> *m1 m2 ...*	1B 48 *n* 00 *m1 m2*	Print normal density graphics	34
<ESC> "L" *n1 n2* *m1 m2*	1B 4C *n1 n2 m1 m2*	Pring high density graphics	36
<ESC> "k" *n* <0> *d1*	1B 6B *n* 00 *d1*	Print fine density graphics	38
<ESC> "X" *n1 n2*	1B 58 *n1 n2*	Print fine density graphics	41
<ESC> <FS> "p" *n m*	1B 1C *70 n m*	Print NV bit image	42
<ESC> <FS> "q"	1B 1C *71*	Define NV bit image	43

Commands to Print Download Characters

Control codes	Hexadecimal codes	Function	Page
<ESC> "&" "1" "1" *n m1 m2 ... m48*	1B 26 31 31 *n m1 m2 ... m48*	Define download character	46
<ESC> "&" <1> <1> *n m1 m2 ... m48*	1B 26 01 01 *n m1 m2 ... m48*		
<ESC> "&" "1" "0" *n*	1B 26 31 30 *n*	Delete a download character	48
<ESC> "&" <1> <0> *n*	1B 26 01 00 *n*		
<ESC> "%" "1" <ESC> "%" <1>	1B 25 31 1B 25 01	Enable download character set	48
<ESC> "%" "0" <ESC> "%" <0>	1B 25 30 1B 25 00	Disable download character set	48
<ESC> <GS> "*" xy	1B 1D 2A 78 79	Definition of download bit image	48
<ESC> <GS> "/" *m*	1B 1D 2F 6D	Printing of download bit image	50

Commands to Control Peripheral Devices

Control codes	Hexadecimal codes	Function	Page
<ESC> <BEL> *n1 n2*	1B 07 *n1 n2*	Define drive pulse width for peripheral device #1.	51
<BEL>	07	Control peripheral device #1	51
<FS>	1C	Control peripheral device #1 immediately.	52
<EM>	19	Control peripheral device #2 immediately.	52
<SUB>	1A	Control peripheral device #2 immediately.	53

Commands to Control Auto Cutter

Control codes	Hexadecimal codes	Function	Page
<ESC> "d" *n*	1B64 n	Partial-cut command to the auto cutter.	53

Other Commands

Control codes	Hexadecimal codes	Function	Page
<CAN>	18	Cancel last line & Initialize printer immediately	54
<DC3>	13	Deselect printer	55
<DC1>	11	Set select mode	55
<RS>	1E	Beep the buzzer	55
<ESC> "@"	1B 40	Initialize printer	55
<ENQ>	05	Enquiry (Status inquiry)	56
<EOT>	04	Near end status inquiry	57
<ESC> "?" <LF> <NUL>	1B 3F 0A 00	Reset printer hardware (Perform test print)	58
<ESC> "8" *n1 n2*	1B 38 *n1 n2*	Registers a logo pattern	58
<ESC> "9" *n1 n2*	1B 39 *n1 n2*	Prints a logo pattern	59

3-2. Star Mode Command Specifications

Commands to Select Characters

Function Select international character set

Code <ESC> "R" *n*

Hex 1B 52 *n*

Initial Value *n* = 0

Remarks Selects an international character set according to the value of *n*, as shown below.

n	Character set	*n*	Character set
0	U.S.A.	7	Spain I
1	France	8	Japan
2	Germany	9	Norway
3	England	10	Denmark II
4	Denmark I	11	Spain II
5	Sweden	12	Latin America
6	Italy		

When the value of *n* is 0 to 9, 0 (00H) to 9 (09H) or "0" (30H) to "9" (39 H) can be set. When the value of *n* is 10 to 12, 10 (AH) to 12 (0CH) or "A" (41H) to "C" (43H) can be set.

Function Select character table

Code <ESC> <GS> t *n*

Hex 1B 1D 74 *n*

Initial Value *n* = 0

Remarks Selects page n from the character code table shown below.

n	Character Table
0	Normal
1	PC437 (USA: Standard Europe)
2	Katakana
3	PC437 (USA: Standard Europe)
4	PC858 (Multi-lingual)
5	PC852 (Latin-2)
6	PC860 (Portuguese)
7	APC861 (Icelandic)
8	PC863 (Canadian-French)
9	PC865 (Nordic)
10	PC866 (Russian)

When the value of *n* is 0 to 9, 0 (00H) to 9 (09H) or "0" (30H) to "9" (39 H) can be set. When the value of *n* is 10, 10 (AH) or "A" (41 H) can be set.

Function Select slash zero

Code <ESC> "/" "1" <ESC> "/" <1>

Hex 1B 2F 31 1B 2F 01

Remarks Causes subsequent zero characters to be printed with a slash when *n* = 1 and without a slash when *n* = 0.

Function Select normal zero

Code <ESC> "/" "0" <ESC> "/" <0>

Hex 1B 2F 30 1B 2F 00

Remarks Selects a normal 0.

Function Select bar code printing

Code <ESC> "b" *n1 n2 n3 n4 d1 ... dk* <RS>

Hex 1B 62 *n1 n2 n3 n4 d1 ... dk 1E*

Remarks Prints bar codes according to the value of n1. Refer to the following table for bar code types.

n1	**Type**
0	UPC-E
1	UPC-A
2	JAN/EAN-8
3	JAN/EAN-13
4	CODE 39
5	ITF
6	CODE 128
7	CODE 93
8	NW-7

The value of *n1* can be set to 0 (00H) or 8 (08H) or "0" (30H) to "8" (38H).

n2: Designates printing characters below bar code or a line feed.

n2	**Action**
1	Does not print characters below the bar code. Line feed occurs after execution of the command.
2	Prints characters below the bar code. Line feed occurs after execution of the command.
3	Does not print characters below the bar code. Line feed does not occur afte execution of the command.
4	Prints characters below the var code. Line feed does not occur after execution of the command.

The value of *n2* can be set to 1 (01H) to 40 (04H) or "1" (31 H) to "4" (34H).

n3: Designates the mode. The width of the minimum module is determined.

n3	**Multi Level**	**Code 39, NW-7**	**ITF**
1	2 Dots	2 Dots (6)	2 Dots (6)
2	3 Dots	3 Dots (9)	4 Dots (9)
3	4 Dots	4 Dots (12)	6 Dots (12)
4	— —	2 Dots (5)	2 Dots (6)
5	— —	3 Dots (8)	4 Dots (9)
6	— —	4 Dots (10)	6 Dots (12)
7	— —	2 Dots (4)	2 Dots (6)
8	— —	3 Dots (6)	4 Dots (9)
9	— —	4 Dots (8)	6 Dots (12)

The value of *n3* can be set to 1 (01H) to 9 (09H) or to "1" (31 H) to "9" (39H). can be set.

Note: Numbers in parenthesis indicate the number of dots for bold patterns.

Note: Multi Level indicate the following bar codes.

a UPC-E c JAN/EAN-8 e CODE 128
b UPC-A d JAN/EAN-13 f CODE 93

n4: Designates the height of the bar code. If the bar code is higher than the amount for the line feed, the amount of the line feed will automatically be adjusted.

Precautions

1. The starting position of the bar code is above the current line.
2. If the bar code exceeds the right edge, characters below the bar will not be printed.
3. You can combine characters and bit images.
4. If the height of the bar code (n4) is higher than the amount for the line feed, that amount for the line feed will be L x a. (L = n4/n rounded values.)
   a: Line feed pitch (Dot lines)
   n: Maximum expansion rate of characters (1 to 6)
   n4: Maximum height of the bar code. (1 to 255)
5. When characters and bar codes are being used together, the larger of n x a and L x a will be used for the amount of line feed.

d1...dk: Bar code data

UPC-E/UPC-A: K = 11 (or 12)
The check digit at the 12th digit is automatically added, and ignored even if it is specified.

JAN/EAN-8: K = 7 (or 8)
The check digit at the 8th digit is automatically added, and ignored even if it is specified.

JAN/EAN-13: K = 12 (or 13)
The check digit at the 13th digit is automatically added, and ignored even if it is specified.

CODE 39:
The value of k is optional and the maximum value also differs according to the modes (21 digits maximum in mode 7). The start/stop code ("*") is automatically added.

ITF:

The value of k is optional and the maximum value also differs according to the modes (40 digits maximum in mode 4). If the data is a number of an odd digit, 0 is automatically added at the beginning of the data.

CODE 128:

The value of k is optional and the maximum value also differs according to the modes and the types of character number (51 digits maximum in mode 1). The check character is automatically added.

CODE 93:

The value of k is optional and the maximum value also differs according to the modes and the types of character (30 digits maximum in mode 1). The check characters (C and K) are automatically added.

NW-7:

The value of k is optional, and the maximum value also differs according to the modes and the types of character number (29 digits maximum in mode 7). The start/stop code is also contained in the data (it is not automatically added).

The bar code printing start position is at the upper end of the current line. If the bar code is positioned beyond the right margin, neither the bar code nor the character below the bar code will be printed.

Data of CODE 128 and CODE 93

When <LF> is used in a command, some kinds of control code cannot be sent by the host PC. The control code should be sent as the data as shown below.

When sending the following data, express as a set of two characters.

Express "% (25H)" as "%0 (25H30H)"

Add "40H-5FH" after "%" for the control codes (00H - 1FH).

Express the control code (7FH) as "%5 (25H35H)."

Add "1-4 (31H - 34H)" after "%" for the function code.

Add "6-8 (36H - 38H)" after "%" for the start code.

Character Codes

Control Codes

CODE		FORMAT		
NUL	00H	%@	25H	40H
SOH	01H	%A	25H	41H
STX	02H	%B	25H	42H
ETX	03H	%C	25H	43H
BOT	04H	%D	25H	44H
ENQ	05H	%E	25H	45H
ACK	06H	%F	25H	46H
BEL	07H	%G	25H	47H
BS	08H	%H	25H	48H
HT	09H	%I	25H	49H
LF	0AH	%J	25H	4AH
VT	0BH	%K	25H	4BH
FF	0CH	%L	25H	4CH
CR	0DH	%M	25H	4DH
SO	0EH	%N	25H	4EH
SI	0FH	%O	25H	4FH
DLE	10H	%P	25H	50H
DC1	11H	%Q	25H	51H
DC2	12H	%R	25H	52H
DC3	13H	%S	25H	53H
DC4	14H	%T	25H	54H
NAK	15H	%U	25H	55H
SYN	16H	%V	25H	56H
ETB	17H	%W	25H	57H
CAN	18H	%X	25H	58H
EM	19H	%Y	25H	59H
SUB	1AH	%Z	25H	5AH
ESC	1BH	%[	25H	5BH
FC	1CH	%¥	25H	5CH
GS	1DH	%]	25H	5DH
RS	1EH	%^	25H	5EH
US	1FH	%_	25H	5FH
DEL	7FH	%5	25H	35H

Special Codes

CODE	FORMAT		
% 25H	%0	25H	30H

Function Codes

CODE	FORMAT			
FNC 1	%1	25H	31H	*
FNC 2	%2	25H	32H	*
FNC 3	%3	25H	33H	*
FNC 4	%4	25H	34H	*

Start Codes

CODE	FORMAT			
START A	%6	25H	36H	*
START B	%7	25H	37H	*
START C	%8	25H	38H	*

* For Code 128 only.

Function	Select 12-dot pitch printing
Code	<ESC> "M"
Hex	1B 4D
Remarks	Prints 12 x 24 dot font characters without spaces.

Function	Select 14-dot pitch printing
Code	<ESC> "p"
Hex	1B 70
Remarks	Prints 12 x 24 dot font characters with 2 dot spaces.

Function	Select 15-dot pitch printing
Code	<ESC> "P"
Hex	1B 50
Remarks	Prints 12 x 24 dot font characters with 3 dot spaces. Spaces are added to the right of the characters.

Function	Select 16-dot pitch printing
Code	<ESC> ":"
Hex	1B 3A
Remarks	Prints 12 x 24 dot font characters with 4 dot spaces. Spaces are added to the right of the characters.

Function Set character spacing

Code <ESC> <SP> *n*

Hex 1B 20 *n*

Initial Value *n*=0

Remarks Sets the amount of space between characters where n is amount set.

n	Space	n	Space
1	1 Dot	9	9 Dots
2	2 Dots	10	10 Dots
3	3 Dots	11	11 Dots
4	4 Dots	12	12 Dots
5	5 Dots	13	13 Dots
6	6 Dots	14	14 Dots
7	7 Dots	15	15 Dots
8	8 Dots		

Spaces are added to the right of the characters.

When the value of n is 1 to 9, 1 (01H) to 9 (09H) or "1" (31H) to "9 (39H) can be set. When the value of n is 10 to 15, 10 (0AH) to 15 (0FH) or "A" (41H) to "F" (46H) can be set.

Function Sets the printing magnified double in character width.

Code <SO>

Hex 0E

Remarks Doubles the width of subsequent print data, including character spacing pitch, horizontally.

Function Resets the printing magnified in character width.

Code <DC4>

Hex 14

Remarks esets the printing expanded in character width.

Function Sets the magnification rate in character width.

Code <ESC> "W" *n*

Hex 1B 57 *n*

Initial Value *n* = 0

Remarks Prints subsequent data expanded in width by the value set by *n*.

n	Action
0	Resets character width (same as DC4)
1	Sets horizontal expansion to a multiple of 2.
2	Sets horizontal expansion to a multiple of 3.
3	Sets horizontal expansion to a multiple of 4.
4	Sets horizontal expansion to a multiple of 5.
5	Sets horizontal expansion to a multiple of 6.

The value of *n* can be set to 0 (00H) to 5 (05H) or "0" (30H) to "5" (35H).

Function Sets the printing magnified double in character height.

Code <ESC> <SO>

Hex 1B 0E

Remarks Doubles the width of subsequent print data, including character spacing pitch, vertically.

Function Resets the printing magnified in character height.

Code <ESC> <DC4>

Hex 1B 14

Remarks Resets the printing expanded in character height.

Function Sets the magnification rate in character height.

Code <ESC> "h" *n*

Hex 1B 68 *n*

Initial Value *n* = 0

Remarks

n	Action
0	Resets character width (same as ESC DC4)
1	Sets vertical expansion to a multiple of 2.
2	Sets vertical expansion to a multiple of 3.
3	Sets vertical expansion to a multiple of 4.
4	Sets vertical expansion to a multiple of 5.
5	Sets vertical expansion to a multiple of 6.

The value of *n* can be set to 0 (00H) to 5 (05H) or "0" (30H) to "5" (35H).

Function Underlining

Code <ESC> "–" *n*

Hex 1B 2D *n*

Initial Value *n* = 0

Remarks Designates underlining for subsequent data by the value of n.

n	Action
0	Cancels underline mode.
1	Sets underline mode.

The value of *n* can be set to 0 (00H) or "0" (30H), or 1 (01H) or "1" (31H).

1. Underlining is not executed for the following.

   a. The area skipped when moving the printing position to the next horizontal tab position.

   b. Block graphics of the IBM character set. (B0H, to DFH, F4H and F5H).

2. 23, 24 dot lines are used for underlining 24 dot fonts.

Function

Select overlining

Code

<ESC> " _ " *n*

Hex

1B 5F *n*

Initial Value

n = 0

Remarks

Designates overlining for subsequent data by the value of n.

n	Action
0	Cancels overline mode.
1	Sets overline mode.

The value of *n* can be set to 0 (00H) or "0" (30H) or 1 (01H) or "1" (31H).

1. Overlining is not executed for the following.

   a. The area skipped when moving the printing position to the next horizontal tab position.

   b. Block graphics of the IBM character set. (B0H, to DFH, F4H and F5H).

2. 23, 24 dot lines are used for overlining 24 dot fonts.

Function	Select highlight printing
Code	<ESC> "4"
Hex	1B 34
Remarks	Highlights or reverses the print of black and white to print the subsequent data including character pitch. 1. Line spaces are not highlighted. 2. Underlines and overlines are white.

Function	Cancel highlight printing
Code	<ESC> "5"
Hex	1B 35
Remarks	Resets the highlighted printing.

Function	Inverted printing
Code	<SI>
Hex	0F
Remarks	Prints subsequent characters up-side down. 1. Input this code at the beginning of the line. Any other position will be ineffective. 2. Regular and inverted characters cannot be used in the same line. Inverted characters are printed as a whole line.

Function	Cancel inverted printing
Code	<DC2>
Hex	12
Remarks	Cancels the printing of inverted characters. 1. Input this code at the beginning of the line. Any other position will be ineffective.

Function	Select emphasized printing
Code	<ESC> "E"
Hex	1B 45
Remarks	Causes subsequent characters to be emphasized.

Function	Cancel emphasized printing
Code	<ESC> "F"
Hex	1B 46
Remarks	Cancels emphasized printing.

Commands to Set the Page Format

Function	Set page length in lines
Code	<ESC> "C" *n*
Hex	1B 43 *n*
Remarks	Sets the length of one page using the current line spacing where *n* is the line pitch. 1. When *n* = 0, the length of the page is set to 24 mm (ESC C NULL n). 2. The current line becomes the top of the page. 3. The bottom margin settings are reset. 4. Change the line spacing after making the setting does not change the length of the page. 5. The power ON default is 42 lines.

Function	Set page length in inches
Code	<ESC> "C" <0> *n*
Hex	1B 43 00 *n*
Initial Value	*n* = 7
Remarks	Sets the length of the page to n x 24 mm. 1. The current line becomes the top of the page. 2. The bottom margin settings are reset.

Function	Set bottom margin
Code	<ESC> "N" *n*
Hex	1B 4E *n*
Initial Value	*n* = 0
Remarks	Sets the bottom margin to *n* lines at the current line pitch.

1. Settings for printing 36 lines or less on one page are ignored.
2. Bottom margin is reset with the following commands.
   a. *n* line page length setting.
   b. Page length setting using 24 mm.
   c. Page length setting using mm.
   d. Parameter n = 0 in this command.
   e. Cancel bottom margin (ESC 0).
   f. When the power is turned ON.
3. The margin does not change when you change the pitch of a line after making this setting.
4. If the position is in the margin when you made this setting, it will take effect from the next page.

Function	Cancel bottom margin
Code	<ESC> "O"
Hex	1B 4F
Remarks	Cancels the bottom margin.

Function	Set left margin
Code	<ESC> "l" *n*
Hex	1B 6C *n*
Remarks	Sets the left margin as a non-printing area using the current character pitch up to digit *n* based on the left edge.

1. Character pitches include spaces between characters, and magnified character settings are valid. The left margin position is the last position of the digit *n*.
2. Settings for printing one line width up to 36 mm (288 dots) are ignored.
3. Changes of the settings partway through a line are valid from the next line.
4. Margin positions do not change even if the character pitches are changed after making the settings.
5. The left edge is the left margin when turning the power ON.

Function	Set right margin
Code	<ESC> "Q" *n*
Hex	1B 51 *n*
Remarks	Sets the right margin as a non-printing area using the current character pitch up to digit *n* based on the right edge.

1. Character pitches include spaces between characters, and magnified character settings are valid. The right margin position is the last position of the digit *n*.
2. Settings for printing areas beyond the right edge are ignored.
3. Settings for printing one line width up to 36 mm (288 dots) are ignored.
4. Changes of the settings partway through a line are valid from the next line.
5. Margin positions do not change even if the character pitches are changed after making the settings.
6. The left edge is the left margin when turning the power ON.
7. Printing data which exceeds the limits of the right margin are printed on the subsequent line after a line feed for printing.
8. Bit dot image data which exceeds the right margin is discarded.

Commands to Move the Print Position

Function	Line feed
Code	<LF>
Hex	0A
Remarks	Prints the data in the line buffer and feeds paper one line. 1. If there is no data prior to this code, only one line of paper is feed. 2. Printing position is the left margin position.

Function	Feed paper *n* lines
Code	<ESC> "a" *n*
Hex	1BH, 61H, *n*
Remarks	Feeds paper n lines when there is no data prior to this code.

Function	Form feed
Code	<FF>
Hex	0C
Remarks	Feeds paper to the top of the next page after printing the data in the line buffer when the memory switch 1-2 is set to 0. Paper is fed back to its original position after a full cut of the paper when the memory switch 1-2 is set ot 1. 1. The following action occurs when DIP switch 2-2 is set.

ON	Feed to the top of the next page after printing.
OFF	Cut paper after feeding approximately 24 mm.

Function	Horizontal tab
Code	<HT>
Hex	09
Remarks	Moves the print position to the next preset horizontal tab position. 1. If there is no tab setting on the right side of the current position, this code is ignored. 2. If there is not tab position inside the left and right margins, it does not move.

Function	Vertical tab
Code	<VT>
Hex	0B
Remarks	Feeds paper up to the next vertical tab position after printing the data in the line buffer. 1. Feeds paper only one line if there is no tab position set. 2. The printing start position is the left margin position and feeds paper to the top of the next page if there is not tab position set on the subsequent line. 3. There is no action if there is no tab position in the bottom margin. (Paper is fed to the top of the next page.) 4. Paper is fed to the top of the next page for the following cases. a. The current line is at the final tab position. b. The current line is below the final tab position.

Function	Set line spacing to 4 mm
Code	<ESC> "z" "1" <ESC> "z" <1>
Hex	1B 7A 31 1B 7A 01
Remarks	Sets the distance of subsequent paper feeds to 4 mm.

Function	Set line spacing to 3 mm
Code	<ESC> "0"
Hex	1B 30
Remarks	Sets the distance of subsequent paper feeds to 3 mm.

Function	One time n/4 mm feed
Code	<ESC> "J" *n*
Hex	1B 4A *n*
Remarks	Prints data in the line buffer and feeds paper n/4 mm.

1. If there is no data prior to this code, only a paper n/4mm paper feed occurs.
2. If the bottom margin is exceeded, paper is fed to the top of the next page.
3. You cannot change the line pitch.

Function	One time n/8 mm feed
Code	<ESC> "I" *n*
Hex	1B 49 *n*
Remarks	Prints data in the line buffer and feeds paper n/8 mm.

1. If there is no data prior to this code, only a paper n/8mm paper feed occurs.
2. If the bottom margin is exceeded, paper is fed to the top of the next page.
3. You cannot change the line pitch.

Function	Set vertical tab stops
Code	<ESC> "B" *n1 n2* ... <0>
Hex	1B 42 *n1 n2* ... 00
Initial Value	Clear
Remarks	Cancels preset vertical tabs and sets new vertical tab stops at lines *n*1 to *n*k using the current line pitch based on the top of the page. Sets tab positions in rising order of size and stops settings when *n* is 0 or below the previous value. A maximum of 16 vertical stops can be set. ESC B NULL rests all horizontal tab positions. 1. When the tab position setting nk is equivalent to the previous set position nk-1 or is smaller, the vertical tab setting is considered to be complete. 2. Tab positions are set and do not move even if the line pitch and bottom margin are changed after making the settings. 3. When k >16, or when it is nk is less than or equal to nk-1, data up to the NULL code is ignored.

Function	Set horizontal tab stops
Code	<ESC> "D" *n1 n2* ... <0>
Hex	1B 44 *n1 n2* ... 00
Initial Value	Cancel
Remarks	Cancels preset vertical tabs and sets new horizontal tab stops at lines *n*1 to *n*k using the current line pitch based on the top of the page. Line pitches including the spaces between characters and magnified settings are valid. Sets tab positions in rising order of size and stops settings when *n* is 0 or below the previous value.

A maximum of 16 horizontal stops can be set.
ESC D NULL rests all horizontal tab positions.

1. When the tab position setting nk is equivalent to the previous set position nk-1 or is smaller, the horizontal tab setting is considered to be complete.
2. Tab positions are set and do not move even if the character pitch and left and right margins are changed after making the settings.
3. When k >16, or when it is nk is greater than or equal to nk-1, data up to the NULL code is ignored.

Function	Absolute position setting
Code	<ESC> <GS> "A" *n1 n2*
Hex	1B 1D 41 *n1 n2*
Remarks	Sets the absolute position based on the left margin position for starting the next printing. The start of the next printing is the [(n1 + n2 x 256) x basic calculated pitch] inch position from the left margin position.

Function	Relative position setting
Code	<ESC> <GS> "R" *n1 n2*
Hex	1B 1D 52 *n1 n2*
Remarks	Sets the relative position based on the current position for starting the next printing. The start of the next printing is the [(n1 + n2 x 256) x basic calculated pitch] inch position from the current position.

1. Ignores settings that exceed the printing area.
2. When set in the right direction from the current position with regard to the character direction, this specifies positive integers and when set in the left direction, this specifies negative integers.
3. Negative integers are shown with the compliment 65536.
   For example, if moving N pitches in the left direction:
   n1 + n2 x 256 = 65536 – N.

Function Alignment

Code <ESC> <GS> "a" *n*

Hex 1B 1D 61 *n*

Initial Value *n* = 0

Remarks Lines up all print data in one line to the specified position. Alignment positions are shown below.

n	Alignment Position
0	Left
1	Center
2	Right

The value of n can be set to 0 (00H) to 2 (02H) or "0" (30H) to "2" (32H).

ABC
ABCD
ABCDE
} ESC GS a 0

ESC GS a 1 { ABC
ABCD
ABCDE

ESC GS a 2 { ABC
ABCD
ABCDE

1. Enabled only when input at the beginning of the line.
2. Aligns positions in the set printing width.
3. Position alignment occurs for the data that is skipped using the following commands.

   a. Horizontal tab (HT)

   b. Absolute position (ESC GS A)

   c. Relative position (ESC GS R)

Commands to Print Dot Graphics

Function	Print normal density graphics
Code	<ESC> "K" *n* <0> *m1*, *m2* ...
Hex	1B 4B *n* 00 *m1 m2* ...
Remarks	1. Prints bit images using 3 dots horizontally and 3 dots vertically for each 1- dot of input data. 2. Bit images are 24 dots vertically and n x 3 dots horizontally. 3. Data exceeding 192 and data that will exceed the right margin are ignored.

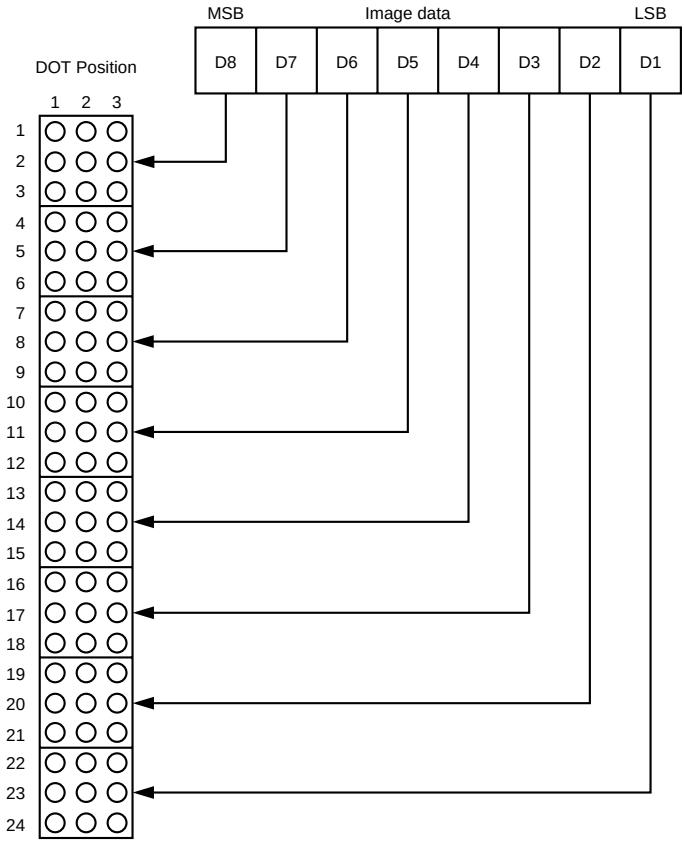

Example

We will create the design below using a bit image.

	m1	m2	m3	m4	m5	m6	m7	m8	m9	m10	m11	m12	m13	m14	m15	m16	m17	m18	m19	m20	m21	m22	m23	m24	m25	m26	m27	m28	m29	m30
D_8																														
D_7				●		●																								
D_6			●					●	●	●	●			●	●	●	●	●	●	●	●	●	●	●	●	●	●	●		
D_5		●	●	●	●	●	●	●		●	●			●	●			●			●			●			●	●		
D_4		●	●	●	●	●	●	●	●	●	●			●	●	●	●	●	●	●	●	●	●	●	●	●	●	●		
D_3		●	●	●	●	●	●	●	●	●	●			●	●	●	●	●	●	●	●	●	●	●	●	●	●	●		
D_2		●	●	●	●	●	●	●	●	●	●	●	●	●	●	●	●	●	●	●	●	●	●	●	●	●	●	●	●	●
D_1	●			●	●			●	●							●	●								●	●				

First, since the volume of data is 30, *n1* = (1E)H. If the data *m1* ~ *m30* is converted to hexadecimal, it appears as shown below.

Data	Binary	Hexa-decimal	Data	Binary	Hexa-decimal	Data	Binary	Hexa-decimal
m1	00000001	01	*m11*	00111110	3E	*m21*	00111110	3E
m2	00011110	1E	*m12*	00000010	02	*m22*	00101110	2E
m3	00111110	3E	*m13*	00000010	02	*m23*	00101110	2E
m4	01011111	5F	*m14*	00111110	3E	*m24*	00111110	3E
m5	00011111	1F	*m15*	00111110	3E	*m25*	00101111	2F
m6	01011110	5E	*m16*	00101111	2F	*m26*	00101111	2F
m7	00011110	1E	*m17*	00101111	2F	*m27*	00111110	3E
m8	00111111	3F	*m18*	00111110	3E	*m28*	00111110	3E
m9	00101111	2F	*m19*	00101110	2E	*m29*	00000010	02
m10	00111110	3E	*m20*	00101110	2E	*m30*	00000010	02

Printing Sample

Function Print high density graphics

Code <ESC> "L" *n1 n2 m1 m2* ...

Hex 1B 4C *n1 n2 m1 m2* ...

Remarks

1. Prints bit images using 1 dot horizontally and 3 dots vertically for each 1 dot of input data.
2. Bit images are 24 dots vertically and n1 + n2 x 256 dots horizontally.
3. Data exceeding 576 and data that will exceed the right margin are ignored.

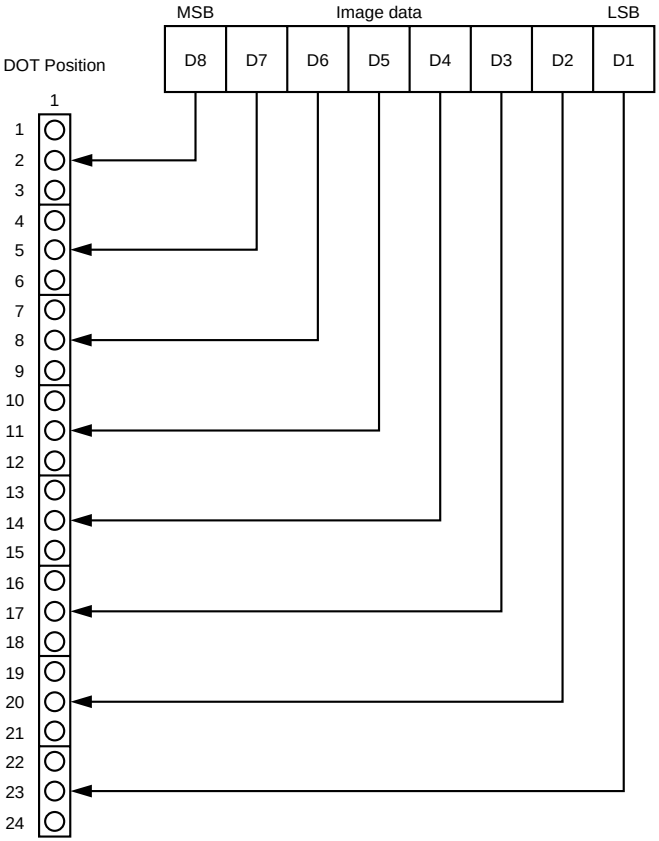

Example

We will create the design below using a bit image.

	m1	m2	m3	m4	m5	m6	m7	m8	m9	m10	m11	m12	m13	m14	m15	m16	m17	m18	m19	m20	m21	m22	m23	m24	m25	m26	m27	m28	m29	m30
D_8																														
D_7				●		●																								
D_6			●					●	●	●	●			●	●	●	●	●	●	●	●	●	●	●	●	●	●	●		
D_5		●	●	●	●	●	●	●		●	●			●	●			●			●			●			●	●		
D_4		●	●	●	●	●	●	●	●	●	●			●	●	●	●	●	●	●	●	●	●	●	●	●	●	●		
D_3		●	●	●	●	●	●	●	●	●	●			●	●	●	●	●	●	●	●	●	●	●	●	●	●	●		
D_2		●	●	●	●	●	●	●	●	●	●	●	●	●	●	●	●	●	●	●	●	●	●	●	●	●	●	●	●	●
D_1	●			●	●			●	●							●	●								●	●				

First, since the volume of data is 30, *n1* = (1E)H. If the data *m1* ~ *m30* is converted to hexadecimal, it appears as shown below.

Data	Binary	Hexa-decimal	Data	Binary	Hexa-decimal	Data	Binary	Hexa-decimal
m1	00000001	01	*m11*	00111110	3E	*m21*	00111110	3E
m2	00011110	1E	*m12*	00000010	02	*m22*	00101110	2E
m3	00111110	3E	*m13*	00000010	02	*m23*	00101110	2E
m4	01011111	5F	*m14*	00111110	3E	*m24*	00111110	3E
m5	00011111	1F	*m15*	00111110	3E	*m25*	00101111	2F
m6	01011110	5E	*m16*	00101111	2F	*m26*	00101111	2F
m7	00011110	1E	*m17*	00101111	2F	*m27*	00111110	3E
m8	00111111	3F	*m18*	00111110	3E	*m28*	00111110	3E
m9	00101111	2F	*m19*	00101110	2E	*m29*	00000010	02
m10	00111110	3E	*m20*	00101110	2E	*m30*	00000010	02

Horizontal density is three times that of the bit image for <ESC>“k”. (Compare the print samples.)

Printing Sample

Function

Print fine density graphics

Code

<ESC> "k" *n* <0> *d1 ... dk [k = n * 24]*

Hex

1B 6B *n* 00 *d1 ... dk [k = n * 24]*

Remarks

1. Prints bit images using 1 horizontal dot and 1 vertical dot for each 1 dot of input data.
2. Data exceeding the right margin is ignored.
3. The relationship between input data and the actual print is shown below.

Relationship between image data and print dots

Image data

b7	b6	b5	b4	b3	b2	b1	b0

Dot position

d_1 $b_7\ b_6\ b_5\ b_4\ b_3\ b_2\ b_1\ b_0$	d_2 $b_7\ b_6\ b_5\ b_4\ b_3\ b_2\ b_1\ b_0$	● ● ●	d_n $b_7\ b_6\ b_5\ b_4\ b_3\ b_2\ b_1\ b_0$
d_{n+1} $b_7\ b_6\ b_5\ b_4\ b_3\ b_2\ b_1\ b_0$	d_{n+2} $b_7\ b_6\ b_5\ b_4\ b_3\ b_2\ b_1\ b_0$	● ● ●	d_{2n} $b_7\ b_6\ b_5\ b_4\ b_3\ b_2\ b_1\ b_0$
d_{2n+1} $b_7\ b_6\ b_5\ b_4\ b_3\ b_2\ b_1\ b_0$	d_{2n+2} $b_7\ b_6\ b_5\ b_4\ b_3\ b_2\ b_1\ b_0$	● ● ●	d_{3n} $b_7\ b_6\ b_5\ b_4\ b_3\ b_2\ b_1\ b_0$
d_{3n+1} $b_7\ b_6\ b_5\ b_4\ b_3\ b_2\ b_1\ b_0$	d_{3n+2} $b_7\ b_6\ b_5\ b_4\ b_3\ b_2\ b_1\ b_0$	● ● ●	d_{4n} $b_7\ b_6\ b_5\ b_4\ b_3\ b_2\ b_1\ b_0$
d_{4n+1} $b_7\ b_6\ b_5\ b_4\ b_3\ b_2\ b_1\ b_0$	d_{4n+2} $b_7\ b_6\ b_5\ b_4\ b_3\ b_2\ b_1\ b_0$	● ● ●	d_{5n} $b_7\ b_6\ b_5\ b_4\ b_3\ b_2\ b_1\ b_0$
d_{5n+1} $b_7\ b_6\ b_5\ b_4\ b_3\ b_2\ b_1\ b_0$	d_{5n+2} $b_7\ b_6\ b_5\ b_4\ b_3\ b_2\ b_1\ b_0$	● ● ●	d_{6n} $b_7\ b_6\ b_5\ b_4\ b_3\ b_2\ b_1\ b_0$
d_{6n+1} $b_7\ b_6\ b_5\ b_4\ b_3\ b_2\ b_1\ b_0$	d_{6n+2} $b_7\ b_6\ b_5\ b_4\ b_3\ b_2\ b_1\ b_0$	● ● ●	d_{7n} $b_7\ b_6\ b_5\ b_4\ b_3\ b_2\ b_1\ b_0$
d_{7n+1} $b_7\ b_6\ b_5\ b_4\ b_3\ b_2\ b_1\ b_0$	d_{7n+2} $b_7\ b_6\ b_5\ b_4\ b_3\ b_2\ b_1\ b_0$	● ● ●	d_{8n} $b_7\ b_6\ b_5\ b_4\ b_3\ b_2\ b_1\ b_0$
d_{8n+1} $b_7\ b_6\ b_5\ b_4\ b_3\ b_2\ b_1\ b_0$	d_{8n+2} $b_7\ b_6\ b_5\ b_4\ b_3\ b_2\ b_1\ b_0$	● ● ●	d_{9n} $b_7\ b_6\ b_5\ b_4\ b_3\ b_2\ b_1\ b_0$
d_{9n+1} $b_7\ b_6\ b_5\ b_4\ b_3\ b_2\ b_1\ b_0$	d_{9n+2} $b_7\ b_6\ b_5\ b_4\ b_3\ b_2\ b_1\ b_0$	● ● ●	d_{10n} $b_7\ b_6\ b_5\ b_4\ b_3\ b_2\ b_1\ b_0$
d_{10n+1} $b_7\ b_6\ b_5\ b_4\ b_3\ b_2\ b_1\ b_0$	d_{10n+2} $b_7\ b_6\ b_5\ b_4\ b_3\ b_2\ b_1\ b_0$	● ● ●	d_{11n} $b_7\ b_6\ b_5\ b_4\ b_3\ b_2\ b_1\ b_0$
d_{11n+1} $b_7\ b_6\ b_5\ b_4\ b_3\ b_2\ b_1\ b_0$	d_{11n+2} $b_7\ b_6\ b_5\ b_4\ b_3\ b_2\ b_1\ b_0$	● ● ●	d_{12n} $b_7\ b_6\ b_5\ b_4\ b_3\ b_2\ b_1\ b_0$
d_{12n+1} $b_7\ b_6\ b_5\ b_4\ b_3\ b_2\ b_1\ b_0$	d_{12n+2} $b_7\ b_6\ b_5\ b_4\ b_3\ b_2\ b_1\ b_0$	● ● ●	d_{13n} $b_7\ b_6\ b_5\ b_4\ b_3\ b_2\ b_1\ b_0$
d_{13n+1} $b_7\ b_6\ b_5\ b_4\ b_3\ b_2\ b_1\ b_0$	d_{13n+2} $b_7\ b_6\ b_5\ b_4\ b_3\ b_2\ b_1\ b_0$	● ● ●	d_{14n} $b_7\ b_6\ b_5\ b_4\ b_3\ b_2\ b_1\ b_0$
d_{14n+1} $b_7\ b_6\ b_5\ b_4\ b_3\ b_2\ b_1\ b_0$	d_{14n+2} $b_7\ b_6\ b_5\ b_4\ b_3\ b_2\ b_1\ b_0$	● ● ●	d_{15n} $b_7\ b_6\ b_5\ b_4\ b_3\ b_2\ b_1\ b_0$
d_{15n+1} $b_7\ b_6\ b_5\ b_4\ b_3\ b_2\ b_1\ b_0$	d_{15n+2} $b_7\ b_6\ b_5\ b_4\ b_3\ b_2\ b_1\ b_0$	● ● ●	d_{16n} $b_7\ b_6\ b_5\ b_4\ b_3\ b_2\ b_1\ b_0$
d_{16n+1} $b_7\ b_6\ b_5\ b_4\ b_3\ b_2\ b_1\ b_0$	d_{16n+2} $b_7\ b_6\ b_5\ b_4\ b_3\ b_2\ b_1\ b_0$	● ● ●	d_{17n} $b_7\ b_6\ b_5\ b_4\ b_3\ b_2\ b_1\ b_0$
d_{17n+1} $b_7\ b_6\ b_5\ b_4\ b_3\ b_2\ b_1\ b_0$	d_{17n+2} $b_7\ b_6\ b_5\ b_4\ b_3\ b_2\ b_1\ b_0$	● ● ●	d_{18n} $b_7\ b_6\ b_5\ b_4\ b_3\ b_2\ b_1\ b_0$
d_{18n+1} $b_7\ b_6\ b_5\ b_4\ b_3\ b_2\ b_1\ b_0$	d_{18n+2} $b_7\ b_6\ b_5\ b_4\ b_3\ b_2\ b_1\ b_0$	● ● ●	d_{19n} $b_7\ b_6\ b_5\ b_4\ b_3\ b_2\ b_1\ b_0$
d_{19n+1} $b_7\ b_6\ b_5\ b_4\ b_3\ b_2\ b_1\ b_0$	d_{19n+2} $b_7\ b_6\ b_5\ b_4\ b_3\ b_2\ b_1\ b_0$	● ● ●	d_{20n} $b_7\ b_6\ b_5\ b_4\ b_3\ b_2\ b_1\ b_0$
d_{20n+1} $b_7\ b_6\ b_5\ b_4\ b_3\ b_2\ b_1\ b_0$	d_{20n+2} $b_7\ b_6\ b_5\ b_4\ b_3\ b_2\ b_1\ b_0$	● ● ●	d_{21n} $b_7\ b_6\ b_5\ b_4\ b_3\ b_2\ b_1\ b_0$
d_{21n+1} $b_7\ b_6\ b_5\ b_4\ b_3\ b_2\ b_1\ b_0$	d_{21n+2} $b_7\ b_6\ b_5\ b_4\ b_3\ b_2\ b_1\ b_0$	● ● ●	d_{22n} $b_7\ b_6\ b_5\ b_4\ b_3\ b_2\ b_1\ b_0$
d_{22n+1} $b_7\ b_6\ b_5\ b_4\ b_3\ b_2\ b_1\ b_0$	d_{22n+2} $b_7\ b_6\ b_5\ b_4\ b_3\ b_2\ b_1\ b_0$	● ● ●	d_{23n} $b_7\ b_6\ b_5\ b_4\ b_3\ b_2\ b_1\ b_0$
d_{23n+1} $b_7\ b_6\ b_5\ b_4\ b_3\ b_2\ b_1\ b_0$	d_{23n+2} $b_7\ b_6\ b_5\ b_4\ b_3\ b_2\ b_1\ b_0$	● ● ●	d_{24n} $b_7\ b_6\ b_5\ b_4\ b_3\ b_2\ b_1\ b_0$

EXAMPLE

Printing Sample

	MSB							LSB	MSB						LSB	
d1																d2
d3				●	●	●	●	●	●	●	●	●	●			d4
d5			●	●	●	●	●	●	●	●	●	●	●	●		d6
d7		●	●	●		●	●	●	●	●	●		●	●	●	d8
d9	●	●	●	●	●							●	●	●	●	●	d10
d11	●	●	●	●	●							●	●	●	●	●	d12
d13	●	●	●	●	●							●	●	●	●	●	d14
d15					●	●	●	●	●	●	●	●					d16
d17				●	●	●	●	●	●	●	●	●	●				d18
d19				●	●	●	●	●	●	●	●	●	●				d20
d21			●	●	●	●	●			●	●	●	●	●			d22
d23			●	●	●							●	●	●			d24
d25		●	●	●	●			●	●			●	●	●	●		d26
d27		●	●	●			●	●	●	●			●	●	●		d28
d29		●	●	●			●	●	●	●			●	●	●		d30
d31	●	●	●	●	●			●	●			●	●	●	●	●	d32
d33	●	●	●	●	●							●	●	●	●	●	d34
d35	●	●	●	●	●	●	●			●	●	●	●	●	●	●	d36
d37	●	●	●	●	●	●	●	●	●	●	●	●	●	●	●	●	d38
d39	●	●	●	●	●	●	●	●	●	●	●	●	●	●	●	●	d40
d41																	d42
d43																	d44
d45																	d46
d47																	d48

Data	Binary	Hexa-decimal	Data	Binary	Hexa-decimal
d1	00000000	00	d2	00000000	00
d3	00011111	1F	d4	11111000	F8
d5	00111111	3F	d6	11111100	FC
d7	01110111	77	d8	01110111	EE
d9	11111000	F8	d10	00011111	1F
d11	11111000	F8	d12	00011111	1F
d13	11111000	F8	d14	00011111	1F
d15	00001111	0F	d16	11110000	F0
d17	00011111	1F	d18	11111000	F8
d19	00011111	1F	d20	11111000	F8
d21	00111110	3E	d22	01111100	7C
d23	00111000	38	d24	00011100	1C
d25	011111001	79	d26	10011110	9E
d27	01110011	73	d28	11001110	CE
d29	01110011	73	d30	11001110	CE
d31	11111001	F9	d32	10011111	9F
d33	11111000	F8	d34	00011111	1F
d35	11111110	FE	d36	01111111	7F
d37	11111111	FF	d38	11111111	FF
d39	11111111	FF	d40	11111111	FF
d41	00000000	00	d42	00000000	00
d43	00000000	00	d44	00000000	00
d45	00000000	00	d46	00000000	00
d47	00000000	00	d48	00000000	00

Function Print fine density graphics

Code <ESC> “X” *n*1 *n*2 d1...d [(n1+n2*256)*3]

Hex 1B 58 *n*1 *n*2 d1...d [(n1+n2*256)*3]

Remarks

1. Prints a bit image of the input data using horizontal and vertical resolutions of 8 dots/mm.
2. Data extending past the right margin is ignored.
3. The relationship between the input data and the actual printing is shown below.

$$1 \leqq n1 + n2 \times 256 \leqq 576$$

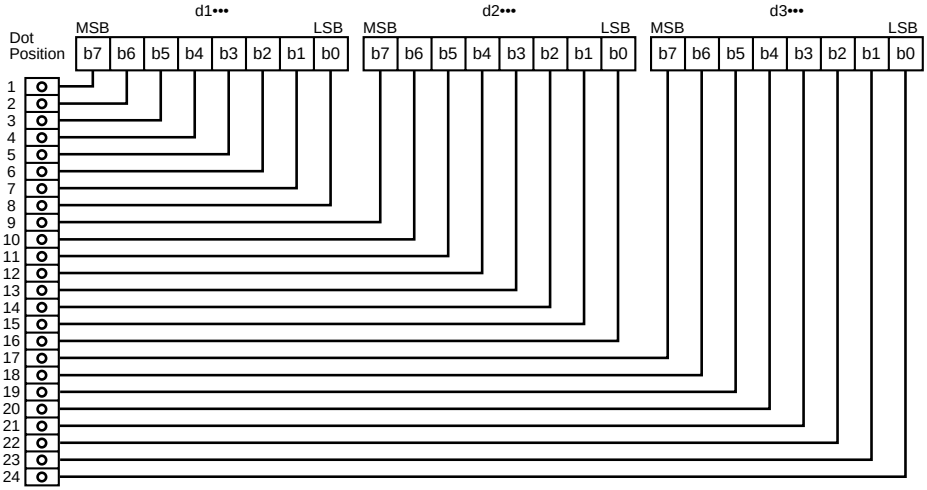

Function Print NV bit image

Code <ESC> <FS> "p" *n m*

Hex 1B 1C *70 n m*

Remarks 1) Prints NV bit image n using the m mode.

m	Mode	Vert. Dot Density	Hor. Dot Density
0, 48	Normal Mode	180 DPI	180 DPI
1, 49	Horizontal Magnification	180 DPI	90 DPI
2, 50	Vertical Magnification	90 DPI	180 DPI
3, 51	4 X Magnification	90 DPI	90 DPI

2) n specifies the NV bit image number.
3) m specifies the bit image mode.

Precautions:

1) NV Bit Image is defined by Define NV Bit Image (ESC FS q) to the non-volatile demiconductor memory and indicates the bit image that can be printed using this command.
2) This command is invalid if the specified NV bit image n is not defined.
3) This is valid only when data exists in the print buffer.
4) Excluding upside down printed characters, this has no effect on the printing modes (bold, layered printing, underlines, character size, character black and white inversion).
5) When the size of a bit image that exceeds the printable area is selected, the data within the printable area can be printed, but data exceeding that range will not be printed.
6) Paper feeds will occur for the number of dots when in the Normal Mode and in the Horizontal Magnification Mode (NV bit image n height) and in the number of dots for Vertical Magnification Mode and 4 X Magnification (NV bit image n height x 2).
7) When printing this bit image is completed, the head of the line is considered the position for the next print and normal data processing will occur.

Function Define NV bit image

Code <ESC> <FS> "q" *n* [xL xH yL yH d1 to dk]1 to [xL xH yL yH d1 to dk]n

Hex 1B 1C 71 n [xL xH yL yH d1 to dk]1 to [xL xH yL yH d1 to dk]n

Definition range $1 \leqq n \leqq 255$, $0 \leqq xL \leqq 255$, $0 \leqq yL \leqq 255$, $0 \leqq d \leqq 255$

$0 \leqq xH \leqq 3$ However, $1 \leqq (xL + xH \times 256) \leqq 1023$
$0 \leqq yH \leqq 1$ However, $1 \leqq (yL + yH \times 256) \leqq 288$
$k = (xL + xH \times 256) \times (yL + yH \times 256) \times 8$
All definition ranges = 1M bit (128 KB)--- TSP2000
= 2M bit (256 KB)--- TSP552/552II

Remarks

1) Defines specified NV bit image.
2) n specifies the number of NV bit images to define.
3) xL or xH specifies the horizontal direction of one NV bit image in $(xL + xH \times 256) \times 8$ bits.
4) yL or yH specifies the vertical direction of one NV bit image in $(yL + yH \times 256) \times 8$ bits.

Precautions:

1) Processing of this command deletes all NV bit images already defined.
   For that reason, it is not possible to redefine only one of a plurality of predefined data.
   In this case, all data must be resent.
2) NV bit images are those that are defined by this command in the flash memory and that can be printed using the NV bit image print command (ESC FS p).
3) Valid only when processing at the head of the string when selecting the Standard Mode.
4) This command is invalid when selecting the Page Mode.
5) This command is valid at the point that processed with the normal values for the 7 bytes of ESC to yH.
6) If a data number exceeding the remaining capacity of the defined range is specified by xL, xH, yL or yH, processing of an argument outside of the defined range occurs.
7) This command is invalid if an argument outside of the defined range is processed with the initial NV bit image data group.

8) If processing of an argument outside of the defined range is processed with the second NV bit image data group, processing of this command is stopped and writing to the flash memory starts.
The NV bit image defined partway at that time is invalid (undefined) but the previous NV bit image is valid.

9) d is the defined data.
'1' is set for the bit corresponding to the dots to print, '0' is set for the bit corresponding to the dots not to print.

10) Defines the nth NV bit image in rising order from the NV bit image number 01H.
Therefore, the initial data group [xL, xH, yL, yH d1 ... dk] becomes the number 01H NV bit image and the last data group [xL, xH, yL, yH d1 ... dk] becomes number n of the NV bit image.
This matches the NV bit image number to specify with the NV bit image print command (ESC FS p).

11) Defined data of one NV bit image is configured by [xL, xH, yL, yH d1 ... dk].

12) TSP2000:
The maximum 1M bit of the definition range on this printer is 128KB.
A plurality of NV bit image definitions are possible, but definition of bit images exceeding the 1M bit (128KB) for the total capacity of all (bit image data + headers) is not possible.
TSP552/552II:
The maximum 2M bit of the definition range on this printer is 256KB.
A plurality of NV bit image definitions are possible, but definition of bit images exceeding the 2M bit (256KB) for the total capacity of all (bit image data + headers) is not possible.

13) The macro definition is cancelled and processing of this command is started if this command is processed while defining the macro.

14) This command executes only the NV bit image definition and does not accompany the print operation.
Printing of the NV bit image is executed by the NV bit image print command (ESC FS p).

15) The relationship between the NV bit image and print data is below.

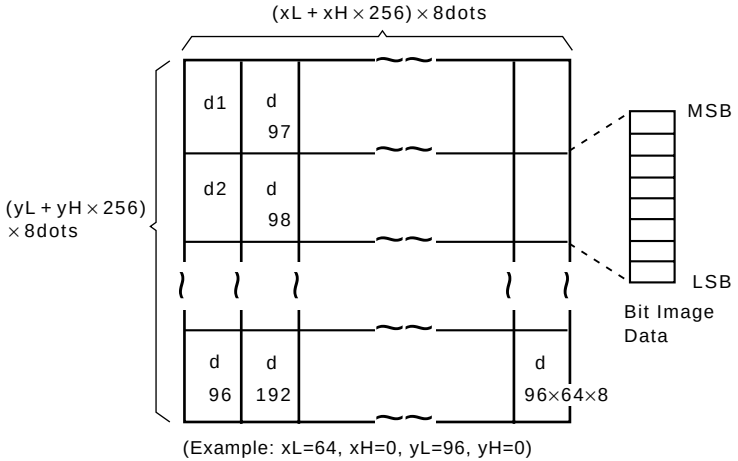

16) TSP2000:
Executing this command will initialize the system. (Initialized to the state when the power is turned ON.)
TSP552/552II:
Executing this command will not be initialize the system.

Commands to Print Download Characters

Function	Define download character
Code	<ESC> "&" <1> <1> *n m1 m2 ... m48*
Hex	1B 26 01 01 *n* *m1 m2 ... m48*
Code	<ESC> "&" "1" "1" *n m1 m2 ... m48*
Hex	1B 26 31 31 *n* *m1 m2 ... m48*
Remarks	Defines one new character and stores it in RAM for later use. *n* is the character code of the character defined and must be between 32 and 127. If the maximum of 32 external characters have already been stored, the oldest stored external character is deleted so that new a new external character can be stored. The character matrix is 12 dots wide and 24 dots high. The relationship between the character pattern and the character data is shown below.

Example

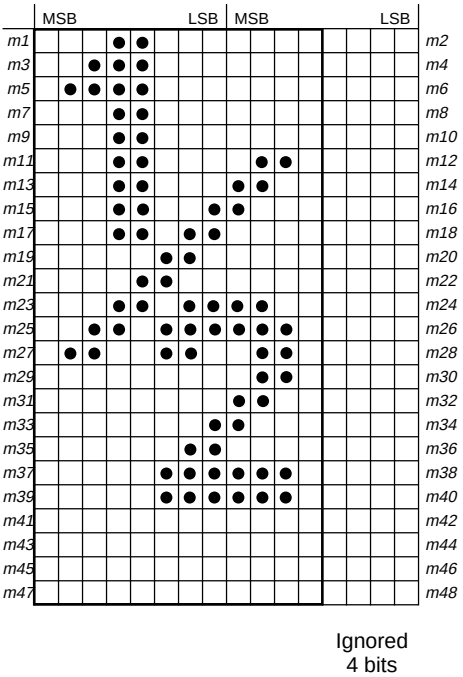

Data	Binary	Hexa-decimal	Data	Binary	Hexa-decimal
m1	00011000	18	*m2*	00000000	00
m3	00111000	38	*m4*	00000000	00
m5	01111000	78	*m6*	00000000	00
m7	00011000	18	*m8*	00000000	00
m9	00011000	18	*m10*	00000000	00
m11	00011000	18	*m12*	01100000	60
m13	00011000	18	*m14*	11000000	C0
m15	00011001	19	*m16*	10000000	80
m17	00011011	1B	*m18*	00000000	00
m19	00000110	06	*m20*	00000000	00
m21	00001100	0C	*m22*	00000000	00
m23	00011011	1B	*m24*	11000000	C0
m25	00110111	37	*m26*	11100000	E0
m27	01100110	66	*m28*	01100000	60
m29	00000000	00	*m30*	01100000	60
m31	00000000	00	*m32*	11000000	C0
m33	00000001	01	*m34*	10000000	80
m35	00000011	03	*m36*	00000000	00
m37	00000111	07	*m38*	11100000	E0
m39	00000111	07	*m40*	11100000	E0
m41	00000000	00	*m42*	00000000	00
m43	00000000	00	*m44*	00000000	00
m45	00000000	00	*m46*	00000000	00
m47	00000000	00	*m48*	00000000	00

Function	Delete a download character	
Code	<ESC> "&" "1" "0" *n*	<ESC> "&" <1> <0> *n*
Hex	1B 26 31 30 *n*	1B 26 01 00 *n*

Function	Enable download character set	
Code	<ESC> "%" "1"	<ESC> "%" <1>
Hex	1B 25 31	1B 25 01

Function	Disable download character set	
Code	<ESC> "%" "0"	<ESC> "%" <0>
Hex	1B 25 30	1B 25 00
Remarks	Disables the selected download character set and returns to the built-in ROM character set.	

Function	Definition of download bit image
Code	<ESC> <GS> "*" x y
Hex	1B 1D 2A 78 79
Remarks	1. There are 8 horizontal dots and 8 vertical dots. 2. d represents the bit image. 1 corresponds to the dot to be printed and 0 corresponds to the dot that is not printed. 3. The following shows the relationship between the download bit image and the print data.

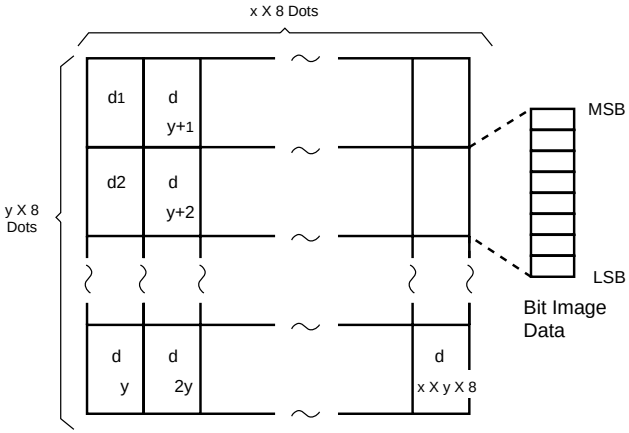

4. The defined download characters are cleared under the following conditions.

   a. The printer initialization (ESC @).

   b. The printer data is cancelled and the command is initialized (CAN).

   c. The printer is reset (ESC ? LF NULL).

   d. The printer is reset (ESC ? @ LF NULL).

   e. The power is cut or a reset signal is received.

Function	Printing of download bit image
Code	<ESC> <GS> "/" *m*
Hex	1B 1D 2F 6D
Remarks	1. This command is ignored if the download bit image data is not defined. 2. This is valid only if there is data in the print buffer. 3. Print modes other than upside down printing (bold print, shadow print, underline, overline, character size and inverted print) are not effected. 4. If the number of download bit image data defined exceeds the print area, that amount exceeding the print area will not print. 5. Paper is fed a multiple of the line pitch.

Commands to Control Peripheral Devices

Function	Define drive pulse width for peripheral device #1
Code	<ESC> <BEL> *n1 n2*
Hex	1B 07 *n1 n2*
Remarks	1. Sets the energizing time for drive of the peripheral devices (such as cash drawer, etc.) and the delay time. 2. Energizing time is n1 x 10 (ms); Delay time is n2 x 10 (ms). 3. After printing, the following commands are executed. a. Drive command A (BEL) for peripheral device 1. b. Drive command B (FS) for peripheral device 2. 4. No error is output if the delay time (n1>n2) is set to a time shorter than the energizing time.

Function	Control peripheral device #1
Code	<BEL>
Hex	07H
Remarks	1. Drives the peripheral devices using the conditions set by the pulse width for drive of the peripheral device 1 (ESC BEL *n1 n2*). 2. The command is executed after processing all data that was received before the code. 3. This is not executed until the drive for peripheral device 2 is completed.

Function

Control peripheral device #1 immediately

Code

<FS>

Hex

1CH

Remarks

1. Drives the peripheral devices using the conditions set by the pulse width for drive of the peripheral device 1 (ESC BEL *n1 n2*).
2. The following describes the difference to Control peripheral device #1 (BEL).

   a. The printer will execute this command when it has been received, while the Control peripheral device #1 (BEL) stores the command in the data buffer just as it does with other control codes and executes them in the order they were received.
3. This is not executed until the drive for peripheral device 2 is completed.

Function

Control peripheral device #2 immediately

Code

<EM>

Hex

19

Remarks

1. Drives peripheral device 2.
2. Energizing time is 200 (ms); Delay time is 200 (ms).
3. This command is executed as soon as it is received.
4. This is not executed until the drive for peripheral device 2 is completed.

Function Control peripheral device #2 immediately

Code <SUB>

Hex 1A

Remarks

1. Drives peripheral device 2.
2. Energizing time is 200 (ms); Delay time is 200 (ms).
3. This command is executed as soon as it is received.
4. This is not executed until the drive for peripheral device 2 is completed.

Commands to Control Auto Cutter

Function Partial-cut command to the auto cutter.

Code <ESC> "d" *n*

Hex 1B 64 n

Remarks

1. The value of n defines the cut operation.

n	Action
0	Partial Action
1	Partial Cut Action
2	Feed paper to the cutting position and perform a partial action.
3	Feed paper to the cutting position and perform a partial cut.

2. Parameter settings outside of the range ignores 3 bytes including the ESC code.
3. There are approximately 24 mm from the printing head to the cutting position.

Other Commands

Function	Cancel last line & Initialize printer immediately
Code	<CAN>
Hex	18
Remarks	1. This cancels the data in data buffer and the line buffer and initializes commands that have already been set. 2. The following commands are not affected. a. Settings selecting the printer (DC1). b. Settings deselecting the printer (DC3). c. Settings of the pulse width of the drive of the peripheral devices. (ESC BEL n1 n2). 3. This code is processed in real-time upon its reception from the host. (direct decode.) 4. If this code is received when the error can be reset, the printer automatically resets to On-line. (However, this is only when the cause of the error has been removed.) 5. If this command is received while printing, the data and line buffers are cleared when the line of printing has been completed. 6. Setting values for enabling and disabling the Panel Switches (ESC e n) are not initialized. 7. If the printer has been deselected by DC3, it will not reset to On-line. 8. Data received after the CAN code is not cleared.

Function	Deselect printer
Code	<DC3>
Hex	13
Remarks	This code deselects the printer. All data is disabled until the DC1 code is received.

Function	Set select mode
Code	<DC1>
Hex	11
Remarks	This code selects the printer.

Function	Beep the printer
Code	<RS>
Hex	1E
Remarks	This makes a short warning beep from the printer. There is not buzzer on this printer so this code is ignored.

Function	Initialize printer
Code	<ESC> "@"
Hex	1B 40
Remarks	1. This cancels all conditions set after the printer was turned ON and returns the printer to the status before turning it ON. 2. The following settings are not cancelled. a. Line buffer b. Data buffer c. Settings for pulse of the drive of the peripheral device (ESC BEL n1 n2).

d. Settings for selecting the printer (DC1).

e. Settings for deselecting the printer (DC3).

3. The printer is initialized after printing the data in the line buffer and feeding 1 line of paper.

Function Enquiry (Status inquiry)

Code <ENQ>

Hex 05

Remarks

1. When On-line, the printer sends the status information to the host.

2. When Off-line, only the following status information is sent to the host.

   a. Mechanical errors

   b. Out of paper errors

3. The following shows the types of status errors.

Bit	Error	"0"	"1"
0	Parity Error	No Error	Error
1	Framing Error	No Error	Error
2	Mechanical Error	No Error	Error
3	Out of Paper Error	No Error	Error
4		Always Set to "0"	
5	Buffer Empty		Empty
6	Buffer Overflow		Overflow
7	Conversion Switch	High (SW: OFF)	Low (SW: ON)

1. This code is processed in real-time upon its reception from the host. (direct decode.)
   However, this is not processed when in ESC sequence.
2. The following are causes of mechanical errors.
   a. Head overheating
   b. Cover open
   c. No print head
3. The buffer is empty when there is no data to be printed and printing has ended.

Function Near end status inquiry

Code <EOT>

Hex 04

Remarks

1. The following shows the status information.

Bit	Error	"0"	"1"
0		Always Set to "0"	
1		Always Set to "0"	
2	Near End Status	Not Detected	Detected
3	Out of Paper Error	No Error	Error
4		Always Set to "0"	
5	Near End Status	Not Detected	Detected
6		Always Set to "0"	
7	Conversion Switch	High (SW: OFF)	Low (SW: ON)

2. This command is always enabled (even when Off-line).

Function Reset printer hardware (Perform test print)

Code <ESC> "?" <LF> <NUL>

Hex 1B 3F 0A 00

Remarks

1. This resets the printer and executes a test print.
2. After the test print, the position where the print stopped is set as the TOF position.

Function Registers a logo pattern

Code <ESC> "8" *n1 n2*

Hex 1B 38 *n1 n2*

Remarks

1. This command registers a logo pattern.
2. n1 defines the total block count of the logo pattern to register. (n1 has no meaning.)

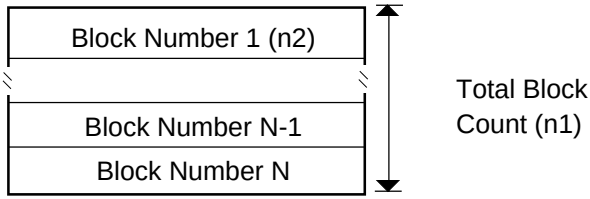

3. n2 specifies the block number of the logo pattern to register.
4. data 1 to data 720 specifies the logo pattern data.

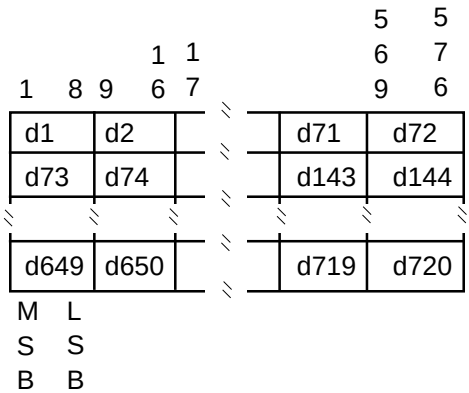

5. If n1 and n2 are out of a defined area, this command is ignored.
6. If n2 is within the defined area, registration does not follow any particular order.
7. The following commands are not cleared.
   a. Printer initialization (ESC @).
   b. Print data cancel and command initialization (CAN).
   c. Printer reset (ESC ? LF NULL).

Function Prints a logo pattern

Code <ESC> "9" *n1 n2*

Hex 1B 39 *n1 n2*

Remarks

1. This command prints the logo pattern.
2. n1 specifies the starting block of the logo pattern.
3. n2 specifies the stopping block of the logo pattern.

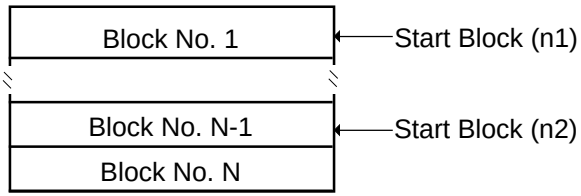

4. This is valid only when the line header is input.
5. When the starting block (n1) > stopping block (n2), this command is ignored.

3-3. ESC/POS Mode Command Summary

Control Code	Hexadecimal Code	Function
HT	09	Horizontal tab
LF	0A	Print line feed
CR	0D	Carriage return
FF	0C	Page mode print and return
DLE EOT	10 04	Real time transmission of status
DLE ENQ	10 05	Real time request to printer
CAN	18	Cancel print data in page mode
ESC FF	1B FF	Print page mode data
ESC SP	1B 20	Set right space amount of character
ESC !	1B 21	Universal print mode designation
ESC #	1B 23	Set memory switch
ESC $ *n*L *n*H	1B 24 *n*L *n*H	Designate absolute printing
ESC %	1B 25	Designate/cancel download character set
ESC &	1B 26	Define download characters
ESC *	1B 2A	Designate bit image mode
ESC -	1B 2D	Designate/cancel underline
ESC 2	1B 32	Set 1/6 inch line feed amount
ESC 3	1B 33	Set line feed amount
ESC =	1B 3D	Select peripheral equipment
ESC ?	1B 3F	Delete download characters
ESC @	1B 40	Initialize printer
ESC D	1B 44	Set horizontal tab position
ESC E	1B 45	Designate/cancel emphasized print
ESC G	1B 47	Designate/cancel double print
ESC J	1B 4A	Print and paper feed
ESC L	1B 4C	Select page mode
ESC R	1B 52	Select international characters
ESC S	1B 53	Select standard mode
ESC T	1B 54	Select character print direction in print mode
ESC V	1B 56	Designate/cancel 90° character rotation
ESC W	1B 57	Set print range in page mode
ESC \	1B 5C	Designate relative position
ESC a	1B 61	Align position
ESC c3	IB 63 33	Select no-paper detector for output of no-paper signal
ESC c4	1B 63 34	Select no valid paper detector at print stop
ESC c5	1B 63 35	Enable/disable panel switch
ESC d	1B 64	Print and paper feed "n" lines
ESC p	1B 70	Designate pulse generation
ESC t	1B 74	Select character code table

Control Code	Hexadecimal Code	Function
ESC {	1B 7B	Designate/cancel inverted printing
ESC ¥ *n*L *n*H	1B 9F *n*L *n*H	Designate relative printing
FS p *n m*	1C 70 *n* *m*	Print NV bit image
FS q *n*	1C 71	Define NV bit image
GS !	1D 21	Designate character size
GS $	1D 24	Designate absolute position of vertical direction of characters in page mode
GS *	1D 2A	Define download bit image
GS /	1D 2F	Print download bit image
GS :	1D 3A	Start/finish macro definition
GS B	1D 42	Designate/cancel reverse printing
GS E n	1D 45 *n*	Select print speed and head energizing time
GS H	1D 48	Select print position of HRI characters
GS I	1D 49	Printer ID transmission
GS L	1D 4C	Set left margin
GS P	1D 50	Set basic calculated pitch
GS V	1D 56	Paper cut
GS W	1D 57	Set print range
GS \	1D 5C	Designate the relative position of vertical characters when printing in the page mode
GS ^	1D 5E	Execute macro
GS a	1D 61	Enable/disable automatic status transmission
Gs b *n*	1D 62 *n*	Smoothing setting/cancel
GS f	1D 66	Select HRI character font
GS h	1D 68	Set bar code height
GS k	1D 6B	Printing of bar code
GS r	1D 72	Transmission of status
GS w	1D 77	Set lateral size of bar code

4. Character Code Tables

Star Mode

Page 0 (Normal)

Hexa-decimal	0	1	2	3	4	5	6	7
0	<NUL> 0	16	SP 32	0 48	@ 64	P 80	` 96	p 112
1	1	<DC1> 17	! 33	1 49	A 65	Q 81	a 97	q 113
2	2	<DC2> 18	” 34	2 50	B 66	R 82	b 98	r 114
3	3	<DC3> 19	# 35	3 51	C 67	S 83	c 99	s 115
4	<EOT> 4	<DC4> 20	$ 36	4 52	D 68	T 84	d 100	t 116
5	<ENQ> 5	21	% 37	5 53	E 69	U 85	e 101	u 117
6	6	22	& 38	6 54	F 70	V 86	f 102	v 118
7	<BEL> 7	23	’ 39	7 55	G 71	W 87	g 103	w 119
8	8	<CAN> 24	(40	8 56	H 72	X 88	h 104	x 120
9	<HT> 9	<EM> 25	) 41	9 57	I 73	Y 89	i 105	y 121
A	<LF> 10	<SUB> 26	* 42	: 58	J 74	Z 90	j 106	z 122
B	<VT> 11	<ESC> 27	+ 43	; 59	K 75	[91	k 107	{ 123
C	<FF> 12	<FS> 28	, 44	< 60	L 76	\ 92	l 108	¦ 124
D	<CR> 13	<GS> 29	– 45	= 61	M 77	] 93	m 109	} 125
E	<SO> 14	<RS> 30	. 46	> 62	N 78	^ 94	n 110	~ 126
F	<SI> 15	31	/ 47	? 63	O 79	_ 95	o 111	▒ 127

Star Mode

Page 0 (Normal)

Hexa-decimal	8	9	A	B	C	D	E	F
0	128	144	Ä 160	é 176	ù 192	ã 208	224	240
1	129	145	Ö 161	è 177	ū 193	â 209	225	241
2	130	146	Ü 162	ē 178	û 194	° 210	226	242
3	131	147	ß 163	ê 179	ç 195	°C 211	227	243
4	132	148	§ 164	ï 180	¿ 196	°F 212	228	244
5	133	149	a 165	í 181	Ñ 197	Ω 213	229	245
6	134	150	o 166	ì 182	ñ 198	µ 214	230	246
7	135	151	f 167	ī 183	Ē 199	Σ 215	231	247
8	136	152	¢ 168	î 184	ɔ 200	σ 216	232	248
9	137	153	1/2 169	ö 185	i 201	x̄ 217	233	249
A	138	154	NT 170	ó 186	Å 202	TL 218	234	250
B	139	155	TX 171	ò 187	ϕ 203	X 219	235	251
C	140	156	¥ 172	ō 188	θ 204	∞ 220	236	252
D	141	157	1/4 173	ô 189	ä 205	± 221	237	253
E	142	158	Ā 174	ü 190	á 206	÷ 222	238	254
F	143	159	ë 175	ú 191	à 207	π 223	239	255

Star Mode

Page 1 (PC437) and Page 3 (PC437)

Hexa-decimal	8	9	A	B	C	D	E	F
0	Ç 128	É 144	á 160	⠿ 176	╚ 192	╩ 208	α 224	≡ 240
1	ü 129	æ 145	í 161	▒ 177	╩ 193	╦ 209	β 225	± 241
2	é 130	Æ 146	ó 162	▓ 178	╦ 194	╠ 210	Γ 226	≥ 242
3	â 131	ô 147	ú 163	│ 179	╠ 195	╩ 211	π 227	≤ 243
4	ä 132	ö 148	ñ 164	┤ 180	─ 196	╬ 212	Σ 228	⌠ 244
5	à 133	ò 149	Ñ 165	╡ 181	┼ 197	╬ 213	σ 229	⌡ 245
6	å 134	û 150	ª 166	╢ 182	╞ 198	╦ 214	µ 230	÷ 246
7	ç 135	ù 151	º 167	╖ 183	╟ 199	╫ 215	τ 231	≈ 247
8	ê 136	ÿ 152	¿ 168	╕ 184	╚ 200	╪ 216	Φ 232	° 248
9	ë 137	Ö 153	⌐ 169	╣ 185	╔ 201	┘ 217	Θ 233	∙ 249
A	è 138	Ü 154	¬ 170	║ 186	╩ 202	┌ 218	Ω 234	– 250
B	ï 139	¢ 155	½ 171	╗ 187	╦ 203	█ 219	δ 235	√ 251
C	î 140	£ 156	¼ 172	╝ 188	╠ 204	▄ 220	∞ 236	∩ 252
D	ì 141	¥ 157	¡ 173	╜ 189	═ 205	▌ 221	φ 237	² 253
E	Ä 142	₧ 158	« 174	╛ 190	╬ 206	▐ 222	∈ 238	■ 254
F	Å 143	ƒ 159	» 175	┐ 191	╩ 207	▀ 223	∩ 239	255

Note: Other characters are the same as those for Character table: Page 0 (Normal).

Star Mode

Page 2 (Katakana)

Hexa-decimal	8	9	A	B	C	D	E	F
0	128	144	160	ー 176	タ 192	ミ 208	224	240
1	129	145	° 161	ア 177	チ 193	ム 209	225	241
2	130	146	「 162	イ 178	ツ 194	メ 210	226	242
3	131	147	」 163	ウ 179	テ 195	モ 211	227	243
4	132	148	、 164	エ 180	ト 196	ヤ 212	228	244
5	133	149	・ 165	オ 181	ナ 197	ユ 213	229	245
6	134	150	ヲ 166	カ 182	ニ 198	ヨ 214	230	246
7	135	151	ァ 167	キ 183	ヌ 199	ラ 215	231	247
8	136	152	ィ 168	ク 184	ネ 200	リ 216	232	248
9	137	153	ゥ 169	ケ 185	ノ 201	ル 217	233	249
A	138	154	ェ 170	コ 186	ハ 202	レ 218	234	250
B	139	155	ォ 171	サ 187	ヒ 203	ロ 219	235	251
C	140	156	ャ 172	シ 188	フ 204	ワ 220	236	252
D	141	157	ュ 173	ス 189	ヘ 205	ン 221	237	253
E	142	158	ョ 174	セ 190	ホ 206	゛ 222	238	254
F	143	× 159	ッ 175	ソ 191	マ 207	゜ 223	239	255

Note: Other characters are the same as those for Character table: Page 0 (Normal).

Star Mode

Page 4 (PC858)
Multi-lingual

	8	9	A	B	C	D	E	F
0	Ç	É	á	░	└	ð	ó	–
1	ü	æ	í	▒	┴	Ð	ß	±
2	é	Æ	ó	▓	┬	Ê	Ô	‗
3	â	ô	ú	│	├	Ë	Ò	¾
4	ä	ö	ñ	┤	─	È	õ	¶
5	à	ò	Ñ	Á	┼	€	Õ	§
6	å	û	ª	Â	ã	ı	µ	÷
7	ç	ù	º	À	Ã	Î	þ	¸
8	ê	ÿ	¿	©	╚	Ï	Þ	°
9	ë	Ö	®	╣	╔	╩	Ú	¨
A	è	Ü	¬	║	╦	╠	Û	·
B	ï	ø	½	╗	╝	╬	Ù	¹
C	î	£	¼	╝	╗	═	ý	³
D	ì	Ø	¡	¢	=	╢	Ý	²
E	Ä	×	«	¥	╬	╫	¯	■
F	Å	ƒ	»	┐	¤	╫	´	

Page 5 (PC852)
Latin-2

	8	9	A	B	C	D	E	F
0	Ç	É	á	░	└	đ	Ó	-
1	ü	Ĺ	í	▒	┴	Đ	ß	˝
2	é	Í	ó	▓	┬	Ď	Ô	˛
3	â	ô	ú	│	├	Ě	Ň	ˇ
4	ä	ö	Ą	┤	─	ď	ń	˘
5	ů	Ľ	ą	Á	┼	Ň	ň	§
6	ć	ľ	Ž	Â	Ă	ł	Ś	÷
7	ç	Ś	ž	Ě	ă	Ł	š	¸
8	ł	ś	Ę	Ş	╚	ě	Ř	°
9	ë	Ö	ę	╣	╔	╩	Ú	¨
A	Ő	Ü		║	╦	╠	ř	·
B	ő	Ť	ź	╗	╝	╬	Ů	ů
C	î	ť	Č	╝	╗	═	ý	Ř
D	Ź	Ł	ş	Ž	=	Ţ	Ý	ř
E	Ä	×	«	ż	╬	Ů	ţ	■
F	Ć	č	»	┐	¤	╫	´	

Page 6 (PC860)
Portuguese

	8	9	A	B	C	D	E	F
0	Ç	É	á	░	└	╨	α	≡
1	ü	À	í	▒	┴	╥	β	±
2	é	È	ó	▓	┬	╤	Γ	≥
3	â	ô	ú	│	├	╘	π	≤
4	ã	õ	ñ	┤	─	╒	Σ	⌠
5	à	ò	Ñ	╡	┼	╞	σ	⌡
6	Á	Ú	ª	╢	╟	╓	µ	÷
7	ç	ù	º	╖	╫	╪	τ	≈
8	ê	Ì	¿	╕	╛	╧	Φ	°
9	È	Õ	ò	╣	╗	┘	Θ	•
A	è	Ü	¬	║	╝	┌	Ω	·
B	í	¢	½	╗	╝	╬	δ	√
C	Ô	£	¼	╝	╗	═	∞	n
D	ì	Ù	¡	╜	=	╜	ø	²
E	Ã	₧	«	╛	╬	╜	∈	■
F	Â	Ó	»	┐	╧	■	∩	

Page 7 (PC861)
Icelandic

	8	9	A	B	C	D	E	F
0	Ç	É	á	░	└	╨	α	≡
1	ü	æ	í	▒	┴	╥	β	±
2	é	Æ	ó	▓	┬	╤	Γ	≥
3	â	ô	ú	│	├	╘	π	≤
4	ä	ö	Á	┤	─	╒	Σ	⌠
5	à	Þ	Í	╡	┼	╞	σ	⌡
6	å	û	Ö	╢	╟	╓	µ	÷
7	ç	Ý	Ü	╖	╫	╪	τ	≈
8	ê	ý	¿	╕	╛	╧	Φ	°
9	ë	Ö	⌐	╣	╗	┘	Θ	•
A	è	Ü	¬	║	╝	┌	Ω	·
B	Ð	ø	½	╗	╝	╬	δ	√
C	ð	£	¼	╝	╗	═	∞	n
D	Þ	Ø	¡	╜	=	╜	ø	²
E	Ä	₧	«	╛	╬	╜	∈	■
F	Å	ƒ	»	┐	╧	■	∩	

Note: Other characters are the same as those for Character table: Page 0 (Normal).

Page 8 (PC863)
Canadian French

	8	9	A	B	C	D	E	F
0	Ç	É	¦	░	└	╨	α	≡
1	ü	È	´	▒	┴	╤	β	±
2	é	Ê	ó	▓	┬	╥	Γ	≥
3	â	ô	ú	│	├	╙	π	≤
4	Â	Ë	¨	┤	─	╞	Σ	⌠
5	à	Ï	¸	╡	┼	╒	σ	⌡
6	¶	û	³	╢	╟	╓	µ	÷
7	ç	ù	¯	╖	╫	╫	τ	≈
8	ê	¤	Î	╕	╚	╪	Φ	°
9	ë	Ô	⌐	╣	╔	┘	Θ	•
A	è	Ü	¬	║	╩	┌	Ω	·
B	ï	¢	½	╗	╦	█	δ	√
C	î	£	¼	╝	╠	▄	∞	n
D	‗	Ù	¾	╜	═	▌	ø	²
E	À	Û	«	╛	╬	▐	∈	■
F	§	ƒ	»	┐	╧	▀	∩	

Page 9 (PC865)
Nordic

	8	9	A	B	C	D	E	F
0	Ç	É	á	░	└	╨	α	≡
1	ü	æ	í	▒	┴	╤	β	±
2	é	Æ	ó	▓	┬	╥	Γ	≥
3	â	ô	ú	│	├	╙	π	≤
4	ä	ö	ñ	┤	─	╞	Σ	⌠
5	à	ò	Ñ	╡	┼	╒	σ	⌡
6	å	û	ª	╢	╟	╓	µ	÷
7	ç	ù	º	╖	╫	╫	τ	≈
8	ê	ÿ	¿	╕	╚	╪	Φ	°
9	ë	Ö	⌐	╣	╔	┘	Θ	•
A	è	Ü	¬	║	╩	┌	Ω	·
B	ï	ø	½	╗	╦	█	δ	√
C	î	£	¼	╝	╠	▄	∞	n
D	ì	Ø	¡	╜	═	▌	ø	²
E	Ä	₧	«	╛	╬	▐	∈	■
F	Å	ƒ	¤	┐	╧	▀	∩	

Page 10 (PC866)
Russian

	8	9	A	B	C	D	E	F
0	А	Р	а	░	└	╨	р	Ё
1	Б	С	б	▒	┴	╤	с	ё
2	В	Т	в	▓	┬	╥	т	Є
3	Г	У	г	│	├	╙	у	є
4	Д	Ф	д	┤	─	╞	ф	Ї
5	Е	Х	е	╡	┼	╒	х	ї
6	Ж	Ц	ж	╢	╟	╓	ц	Ў
7	З	Ч	з	╖	╫	╫	ч	ў
8	И	Ш	и	╕	╚	╪	ш	°
9	Й	Щ	й	╣	╔	┘	щ	•
A	К	Ъ	к	║	╩	┌	ъ	·
B	Л	Ы	л	╗	╦	█	ы	√
C	М	Ь	м	╝	╠	▄	ь	№
D	Н	Э	н	╜	═	▌	э	¤
E	О	Ю	о	╛	╬	▐	ю	■
F	П	Я	п	┐	╧	▀	я	

Note: Other characters are the same as those for Character table: Page 0 (Normal).

Star Mode

International Character Set

	35	36	64	91	92	93	94	96	123	124	125	126
U. S. A.	#	$	@	[	\	]	ˆ	`	{	|	}	~
France	#	$	à	°	ç	§	ˆ	`	é	ù	è	¨
Germany	#	$	§	Ä	Ö	Ü	ˆ	`	ä	ö	ü	ß
England	£	$	@	[	\	]	ˆ	`	{	|	}	~
Denmark 1	#	$	@	Æ	Ø	Å	ˆ	`	æ	ø	å	~
Sweden	#	¤	É	Ä	Ö	Å	Ü	é	ä	ö	å	ü
Italy	#	$	@	°	\	é	ˆ	ù	à	ò	è	ì
Spain 1	₧	$	@	¡	Ñ	¿	ˆ	’	¨	ñ	}	~
Japan	#	$	@	[	¥	]	ˆ	`	{	|	}	~
Norway	#	¤	É	Æ	Ø	Å	Ü	é	æ	ø	å	ü
Denmark 2	#	$	É	Æ	Ø	Å	Ü	é	æ	ø	å	ü
Spain 2	#	$	á	¡	Ñ	¿	é	’	í	ñ	ó	ú
Latin America	#	$	á	¡	Ñ	¿	é	ü	í	ñ	ó	ú

ESC/POS Mode

Page 0 (PC437)

Hexa-decimal	0	1	2	3	4	5	6	7
0	<NUL> 0	<DLE> 16	SP 32	0 48	@ 64	P 80	` 96	p 112
1	1	<XON> 17	! 33	1 49	A 65	Q 81	a 97	q 113
2	2	18	” 34	2 50	B 66	R 82	b 98	r 114
3	3	<XOFF> 19	# 35	3 51	C 67	S 83	c 99	s 115
4	<EOT> 4	20	$ 36	4 52	D 68	T 84	d 100	t 116
5	<ENQ> 5	21	% 37	5 53	E 69	U 85	e 101	u 117
6	6	22	& 38	6 54	F 70	V 86	f 102	v 118
7	7	23	’ 39	7 55	G 71	W 87	g 103	w 119
8	8	<CAN> 24	(40	8 56	H 72	X 88	h 104	x 120
9	<HT> 9	25	) 41	9 57	I 73	Y 89	i 105	y 121
A	<LF> 10	<SUB> 26	* 42	: 58	J 74	Z 90	j 106	z 122
B	11	<ESC> 27	+ 43	; 59	K 75	[91	k 107	{ 123
C	<FF> 12	<FS> 28	, 44	< 60	L 76	\ 92	l 108	¦ 124
D	<CR> 13	<GS> 29	– 45	= 61	M 77	] 93	m 109	} 125
E	14	30	. 46	> 62	N 78	^ 94	n 110	~ 126
F	15	31	/ 47	? 63	O 79	_ 95	o 111	SP 127

ESC/POS Mode

Page 0 (PC437)

Hexa-decimal	8	9	A	B	C	D	E	F
0	Ç 128	É 144	á 160	⠿ 176	└ 192	╨ 208	α 224	≡ 240
1	ü 129	æ 145	í 161	▒ 177	┴ 193	╤ 209	β 225	± 241
2	é 130	Æ 146	ó 162	▓ 178	┬ 194	╥ 210	Γ 226	≥ 242
3	â 131	ô 147	ú 163	│ 179	├ 195	╙ 211	π 227	≤ 243
4	ä 132	ö 148	ñ 164	┤ 180	─ 196	╘ 212	Σ 228	⌠ 244
5	à 133	ò 149	Ñ 165	╡ 181	┼ 197	╒ 213	σ 229	⌡ 245
6	å 134	û 150	ª 166	╢ 182	╞ 198	╓ 214	µ 230	÷ 246
7	ç 135	ù 151	º 167	╖ 183	╟ 199	╫ 215	τ 231	≈ 247
8	ê 136	ÿ 152	¿ 168	╕ 184	╚ 200	╪ 216	Φ 232	° 248
9	ë 137	Ö 153	⌐ 169	╣ 185	╔ 201	┘ 217	Θ 233	• 249
A	è 138	Ü 154	¬ 170	║ 186	╩ 202	┌ 218	Ω 234	· 250
B	ï 139	¢ 155	½ 171	╗ 187	╦ 203	█ 219	δ 235	√ 251
C	î 140	£ 156	¼ 172	╝ 188	╠ 204	▄ 220	∞ 236	ⁿ 252
D	ì 141	¥ 157	¡ 173	╜ 189	═ 205	▌ 221	φ 237	² 253
E	Ä 142	₧ 158	« 174	╛ 190	╬ 206	▐ 222	∈ 238	■ 254
F	Å 143	ƒ 159	» 175	┐ 191	╧ 207	▀ 223	∩ 239	SP 255

ESC/POS Mode

Page 1 (Katakana)

Hexa-decimal	8	9	A	B	C	D	E	F
0	─ 128	┴ 144	SP 160	ー 176	タ 192	ミ 208	═ 224	× 240
1	━ 129	┬ 145	。 161	ア 177	チ 193	ム 209	╞ 225	円 241
2	┅ 130	┤ 146	「 162	イ 178	ツ 194	メ 210	╪ 226	年 242
3	┄ 131	├ 147	」 163	ウ 179	テ 195	モ 211	╡ 227	月 243
4	┈ 132	┼ 148	、 164	エ 180	ト 196	ヤ 212	◢ 228	日 244
5	┉ 133	━ 149	・ 165	オ 181	ナ 197	ユ 213	◣ 229	時 245
6	┊ 134	┃ 150	ヲ 166	カ 182	ニ 198	ヨ 214	◥ 230	分 246
7	┋ 135	┃ 151	ァ 167	キ 183	ヌ 199	ラ 215	◤ 231	秒 247
8	╎ 136	┌ 152	ィ 168	ク 184	ネ 200	リ 216	♠ 232	〒 248
9	╏ 137	┐ 153	ゥ 169	ケ 185	ノ 201	ル 217	♥ 233	市 249
A	┆ 138	└ 154	ェ 170	コ 186	ハ 202	レ 218	♦ 234	区 250
B	┇ 139	┘ 155	ォ 171	サ 187	ヒ 203	ロ 219	♣ 235	町 251
C	┈ 140	┌ 156	ャ 172	シ 188	フ 204	ワ 220	● 236	村 252
D	┉ 141	┐ 157	ュ 173	ス 189	ヘ 205	ン 221	○ 237	人 253
E	┊ 142	└ 158	ョ 174	セ 190	ホ 206	゛ 222	／ 238	▒ 254
F	┋ 143	┘ 159	ッ 175	ソ 191	マ 207	゜ 223	＼ 239	SP 255

Note: Other characters are the same as those for Page 0.

ESC/POS Mode

Page 2 (PC850: Multilingual)

Hexa-decimal	8	9	A	B	C	D	E	F
0	Ç 128	É 144	á 160	░ 176	└ 192	ð 208	σ 224	─ 240
1	ü 129	æ 145	í 161	▒ 177	┴ 193	Ð 209	β 225	± 241
2	é 130	Æ 146	ó 162	▓ 178	┬ 194	Ê 210	Ô 226	= 242
3	â 131	ô 147	ú 163	│ 179	├ 195	Ë 211	Ò 227	¾ 243
4	ä 132	ö 148	ñ 164	┤ 180	─ 196	È 212	õ 228	¶ 244
5	à 133	ò 149	Ñ 165	Á 181	+ 197	˥ 213	Õ 229	§ 245
6	å 134	û 150	ª 166	Â 182	ã 198	Í 214	µ 230	÷ 246
7	ç 135	ù 151	º 167	À 183	Ã 199	Î 215	Þ 231	¸ 247
8	ê 136	ÿ 152	¿ 168	© 184	╚ 200	Ï 216	þ 232	° 248
9	ë 137	Ö 153	® 169	╣ 185	╔ 201	˩ 217	Ú 233	¨ 249
A	è 138	Ü 154	¬ 170	║ 186	╩ 202	╭ 218	Û 234	· 250
B	ï 139	ø 155	½ 171	╗ 187	╦ 203	█ 219	Ù 235	¹ 251
C	î 140	£ 156	¼ 172	╝ 188	╠ 204	▄ 220	Ý 236	³ 252
D	ì 141	Ø 157	¡ 173	¢ 189	═ 205	¦ 221	Ý 237	² 253
E	Ä 142	× 158	« 174	¥ 190	╬ 206	Ì 222	¯ 238	▮ 254
F	Å 143	ƒ 159	» 175	┐ 191	¤ 207	▀ 223	´ 239	SP 255

Note: Other characters are the same as those for Page 0.

ESC/POS Mode

Page 3 (PC860: Portuguese)

Hexa-decimal	8	9	A	B	C	D	E	F
0	Ç 128	É 144	á 160	⠿ 176	└ 192	╨ 208	α 224	≡ 240
1	ü 129	À 145	í 161	▒ 177	┴ 193	╤ 209	β 225	± 241
2	é 130	È 146	ó 162	▓ 178	┬ 194	╥ 210	Γ 226	≥ 242
3	â 131	ô 147	ú 163	│ 179	├ 195	╙ 211	π 227	≤ 243
4	ã 132	õ 148	ñ 164	┤ 180	─ 196	╘ 212	Σ 228	⌠ 244
5	à 133	ò 149	Ñ 165	╡ 181	┼ 197	╒ 213	σ 229	⌡ 245
6	Á 134	Ú 150	ª 166	╢ 182	╞ 198	╓ 214	µ 230	÷ 246
7	ç 135	ù 151	º 167	╖ 183	╟ 199	╫ 215	τ 231	≈ 247
8	ê 136	Ì 152	¿ 168	╕ 184	╚ 200	╪ 216	Φ 232	° 248
9	Ê 137	Õ 153	Ò 169	╣ 185	╔ 201	┘ 217	Θ 233	• 249
A	è 138	Ü 154	¬ 170	║ 186	╩ 202	┌ 218	Ω 234	· 250
B	Í 139	Ç 155	½ 171	╗ 187	╦ 203	█ 219	δ 235	√ 251
C	Ô 140	£ 156	¼ 172	╝ 188	╠ 204	▄ 220	∞ 236	n 252
D	ì 141	Ù 157	¡ 173	╜ 189	═ 205	▌ 221	ϕ 237	2 253
E	Ã 142	₧ 158	« 174	╛ 190	╬ 206	▐ 222	∈ 238	■ 254
F	Â 143	Ó 159	» 175	┐ 191	╧ 207	▀ 223	∩ 239	SP 255

Note: Other characters are the same as those for Page 0.

ESC/POS Mode

Page 4 (PC863: Canadian-French)

Hexa-decimal	8	9	A	B	C	D	E	F
0	Ç 128	É 144	¦ 160	░ 176	└ 192	╨ 208	α 224	≡ 240
1	ü 129	È 145	´ 161	▒ 177	┴ 193	╤ 209	β 225	± 241
2	é 130	Ê 146	ó 162	▓ 178	┬ 194	╥ 210	Γ 226	≥ 242
3	â 131	ô 147	ú 163	│ 179	├ 195	╙ 211	π 227	≤ 243
4	Â 132	Ë 148	¨ 164	┤ 180	─ 196	╘ 212	Σ 228	⌠ 244
5	à 133	Ï 149	╕ 165	╡ 181	┼ 197	╒ 213	σ 229	⌡ 245
6	¶ 134	û 150	³ 166	╢ 182	╞ 198	╓ 214	µ 230	÷ 246
7	ç 135	ù 151	╗ 167	╖ 183	╟ 199	╫ 215	τ 231	≈ 247
8	ê 136	¤ 152	╝ 168	╜ 184	╚ 200	╪ 216	Φ 232	° 248
9	ë 137	Ô 153	┘ 169	╛ 185	╔ 201	┘ 217	Θ 233	• 249
A	è 138	Ü 154	┐ 170	║ 186	╩ 202	┌ 218	Ω 234	· 250
B	ï 139	¢ 155	½ 171	╗ 187	╦ 203	█ 219	δ 235	√ 251
C	î 140	£ 156	¼ 172	╝ 188	╠ 204	▄ 220	∞ 236	ⁿ 252
D	= 141	Ù 157	¾ 173	╜ 189	═ 205	▌ 221	φ 237	² 253
E	À 142	Û 158	« 174	╛ 190	╬ 206	▐ 222	∈ 238	■ 254
F	§ 143	ƒ 159	» 175	┐ 191	╧ 207	▀ 223	∩ 239	SP 255

Note: Other characters are the same as those for Page 0.

ESC/POS Mode

Page 5 (PC865: Nordic)

Hexa-decimal	8	9	A	B	C	D	E	F
0	Ç 128	É 144	á 160	⠿ 176	└ 192	╨ 208	α 224	≡ 240
1	ü 129	æ 145	í 161	▒ 177	┴ 193	╤ 209	β 225	± 241
2	é 130	Æ 146	ó 162	▓ 178	┬ 194	╥ 210	Γ 226	≥ 242
3	â 131	ô 147	ú 163	│ 179	├ 195	╙ 211	π 227	≤ 243
4	ä 132	ö 148	ñ 164	┤ 180	─ 196	╘ 212	Σ 228	⌠ 244
5	à 133	ò 149	Ñ 165	╡ 181	┼ 197	╒ 213	σ 229	⌡ 245
6	å 134	û 150	ª 166	╢ 182	╞ 198	╓ 214	µ 230	÷ 246
7	ç 135	ù 151	º 167	╖ 183	╟ 199	╫ 215	τ 231	≈ 247
8	ê 136	ÿ 152	¿ 168	╕ 184	╚ 200	╪ 216	Φ 232	° 248
9	ë 137	Ö 153	⌐ 169	╣ 185	╔ 201	┘ 217	Θ 233	• 249
A	è 138	Ü 154	¬ 170	║ 186	╩ 202	┌ 218	Ω 234	· 250
B	ï 139	ø 155	½ 171	╗ 187	╦ 203	█ 219	δ 235	√ 251
C	î 140	£ 156	¼ 172	╝ 188	╠ 204	▄ 220	∞ 236	n 252
D	ì 141	Ø 157	¡ 173	╜ 189	═ 205	▌ 221	φ 237	² 253
E	Ä 142	₧ 158	« 174	╛ 190	╬ 206	▐ 222	∈ 238	■ 254
F	Å 143	ƒ 159	¤ 175	┐ 191	╧ 207	▀ 223	∩ 239	SP 255

Note: Other characters are the same as those for Page 0.

ESC/POS Mode

Page 255 (Space Page)

Hexa-decimal	8	9	A	B	C	D	E	F
0	SP 128	SP 144	SP 160	SP 176	SP 192	SP 208	SP 224	SP 240
1	SP 129	SP 145	SP 161	SP 177	SP 193	SP 209	SP 225	SP 241
2	SP 130	SP 146	SP 162	SP 178	SP 194	SP 210	SP 226	SP 242
3	SP 131	SP 147	SP 163	SP 179	SP 195	SP 211	SP 227	SP 243
4	SP 132	SP 148	SP 164	SP 180	SP 196	SP 212	SP 228	SP 244
5	SP 133	SP 149	SP 165	SP 181	SP 197	SP 213	SP 229	SP 245
6	SP 134	SP 150	SP 166	SP 182	SP 198	SP 214	SP 230	SP 246
7	SP 135	SP 151	SP 167	SP 183	SP 199	SP 215	SP 231	SP 247
8	SP 136	SP 152	SP 168	SP 184	SP 200	SP 216	SP 232	SP 248
9	SP 137	SP 153	SP 169	SP 185	SP 201	SP 217	SP 233	SP 249
A	SP 138	SP 154	SP 170	SP 186	SP 202	SP 218	SP 234	SP 250
B	SP 139	SP 155	SP 171	SP 187	SP 203	SP 219	SP 235	SP 251
C	SP 140	SP 156	SP 172	SP 188	SP 204	SP 220	SP 236	SP 252
D	SP 141	SP 157	SP 173	SP 189	SP 205	SP 221	SP 237	SP 253
E	SP 142	SP 158	SP 174	SP 190	SP 206	SP 222	SP 238	SP 254
F	SP 143	SP 159	SP 175	SP 191	SP 207	SP 223	SP 239	SP 255

Note: Other characters are the same as those for Page 0.

ESC/POS Mode

International Character Set

	35	36	64	91	92	93	94	96	123	124	125	126
U. S. A.	#	$	@	[	\	]	ˆ	`	{	|	}	~
France	#	$	à	°	ç	§	ˆ	`	é	ù	è	¨
Germany	#	$	§	Ä	Ö	Ü	ˆ	`	ä	ö	ü	ß
England	£	$	@	[	\	]	ˆ	`	{	|	}	~
Denmark 1	#	$	@	Æ	Ø	Å	ˆ	`	æ	ø	å	~
Sweden	#	¤	É	Ä	Ö	Å	Ü	é	ä	ö	å	ü
Italy	#	$	@	°	\	é	ˆ	ù	à	ò	è	ì
Spain	₧	$	@	¡	Ñ	¿	ˆ	’	¨	ñ	}	~
Japan	#	$	@	[	¥	]	ˆ	`	{	|	}	~
Norway	#	¤	É	Æ	Ø	Å	Ü	é	æ	ø	å	ü
Denmark 2	#	$	É	Æ	Ø	Å	Ü	é	æ	ø	å	ü

HEAD OFFICE
STAR MICRONICS CO., LTD.
536 Nanatsushinnya, Shimizu, Shizuoka
424-0066 Japan
Tel: 0543-47-0112, Fax: 0543-48-5271

Please access the following URL
http://www.star-micronics.co.jp/service/sp_sup_e.htm
for the lastest revision of the manual.

OVERSEAS SUBSIDIARY COMPANIES
STAR MICRONICS AMERICA, INC.
1150 King Georges Post Road
Edison, New Jersey 08837-3729 U.S.A
Tel: 732-623-5555, Fax: 732-623-5590

STAR MICRONICS U.K. LTD.
Star House, Peregrine Business Park, Gomm Road,
High Wycombe, Bucks, HP13 7DL, UK
Tel: 01494-471111, Fax: 01494-473333

2000.05.27
Printed in Japan, 80872057